RevNo	Revision note	Date	Signature	Checked

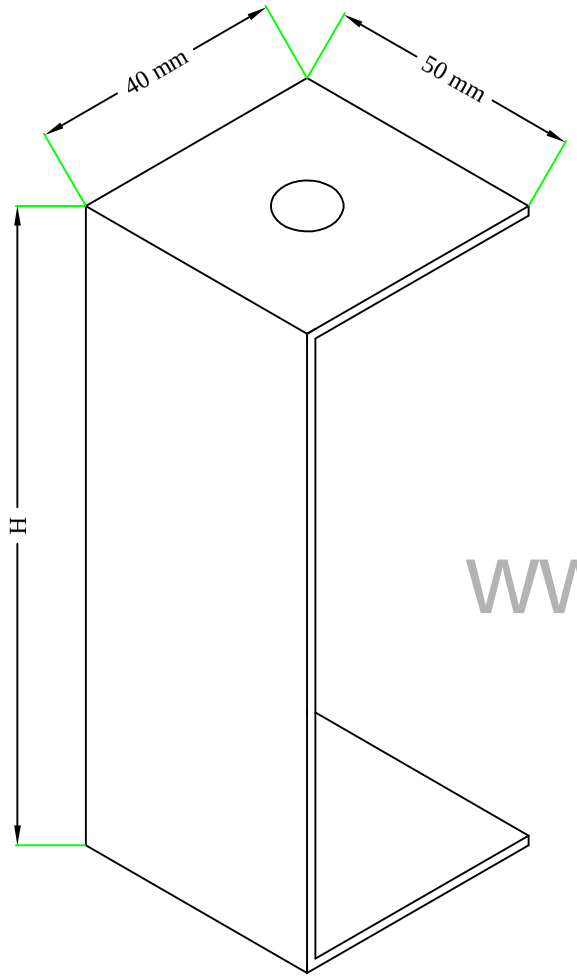

Side Cover Clamp

H= Height Of Cable Tray or Cable Ladder

www.Arashk-Co.com

Dimensions: ----

Weight: ~ Kg

Scale: 1:1

Projection :

SURFACE DIN 1302 — 0.025 / 0.05 / 0.1 / 0.2 / 0.4 / 0.8 / 1.6 / 3.2 / 6.3 / 12.5 / 25 / 50

FREE DIMENTION TOLERANS TO DIN 7168

CLASS	1-6	6-30	30-100	100-300	300-1000
F	±0.05	±0.1	±0.15	±0.2	±0.3
M	±0.1	±0.2	±0.3	±0.5	±0.8
C	±0.2	±0.5	±0.8	±1.2	±2.0

Part No. :

Arashk Sanaat Pasargad
Engineering Office

Quantity: --

Material: St 37

	Name	Date
Design	H.Abbasi	90//2/1
Drawn	H.Ziabakhsh	90/2/1
Checked	H.Abbasi	90/2/1
Approved	Elli	90/2/1

Part Name: Side Cover Clamp

Standard: DIN 1541

Treatment: Arashk Co.

Sheet: ---

Rev. : 0

All Dimensions are in Millimeter Unless Noted !

DWG NO. : Die-001

File: Die

2 3 4 5 6