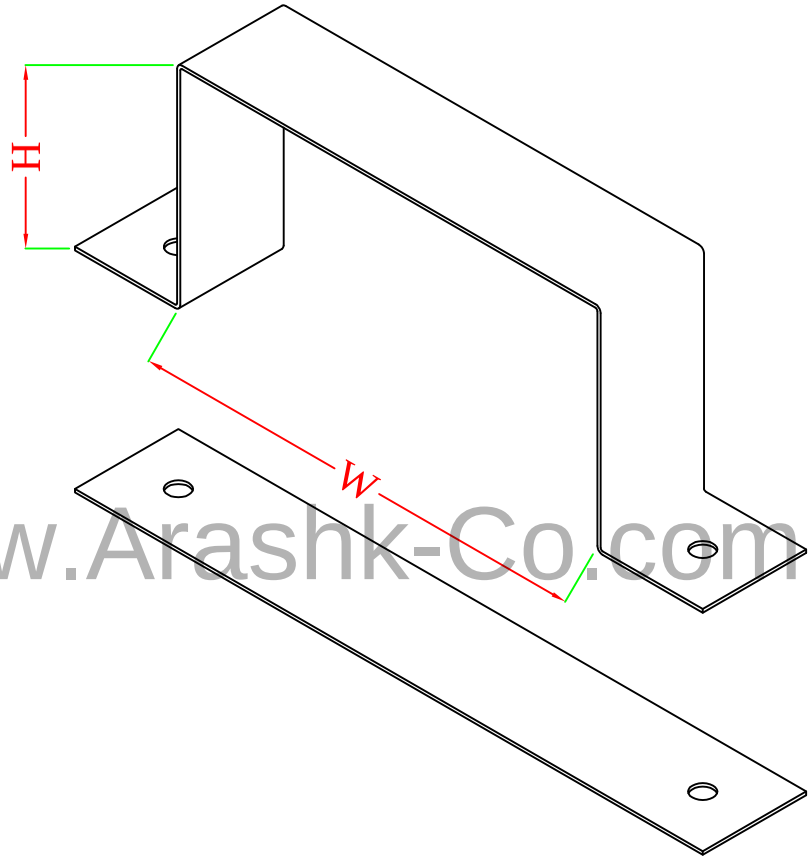

www.Arashk-Co.com

Dimensions:	Weight: ~ Kg	Scale: 1:1	Projection :
SURFACE DIN 1302	0.025 0.05 0.1	0.2 0.4 0.8	0.8 1.6 3.2	3.2 6.3 12.5 25 50

FREE DIMENTION TOLERANS TO DIN 7168

CLASS	1-6	6-30	30-100	100-300	300-1000
F	±0.05	±0.1	±0.15	±0.2	±0.3
M	±0.1	±0.2	±0.3	±0.5	±0.8
C	±0.2	±0.5	±0.8	±1.2	±2.0

Part No. :

Arashk Sanaat Pasargad
Engineering Office

Quantity:

Material: Hot Dip Galvanized Sheet

	Name	Date
Design	Arashk Co	------
Drawn	H.Abbasi	88/3/12
Checked	H.Ziabakhsh	88/3/12
Approved	Elli	88/3/12

Part Name: Cable Tray Clamp

Standard: DIN 59232

Treatment:

Sheet: ---

Rev. : 0

All Dimensions are in Millimeter Unless Noted !

DWG NO. : Clamp-001

File: Cable Tray