BS EN 61439-6:2012

BSI Standards Publication

# Low-voltage switchgear and controlgear assemblies

## Part 6: Busbar trunking systems (busways)

NO COPYING WITHOUT BSI PERMISSION EXCEPT AS PERMITTED BY COPYRIGHT LAW

*raising standards worldwide*™

Copyright British Standards Institution
Provided by IHS under license with BSI - Uncontrolled Copy
No reproduction or networking permitted without license from IHS

Licensee=Hong Kong Polytechnic University/9976803100
Not for Resale, 10/16/2012 15:03:58 MDT

## National foreword

This British Standard is the UK implementation of EN 61439-6:2012. It is identical to IEC 61439-6:2012. It supersedes BS EN 60439-2:2000 which is withdrawn.

The UK participation in its preparation was entrusted by Technical Committee PEL/17, Switchgear, controlgear, and HV-LV co-ordination, to Subcommittee PEL/17/3, Low voltage switchgear and controlgear assemblies.

A list of organizations represented on this committee can be obtained on request to its secretary.

This publication does not purport to include all the necessary provisions of a contract. Users are responsible for its correct application.

© The British Standards Institution 2012

Published by BSI Standards Limited 2012

ISBN 978 0 580 65629 3

ICS 29.130.20

**Compliance with a British Standard cannot confer immunity from legal obligations.**

This British Standard was published under the authority of the Standards Policy and Strategy Committee on 30 September 2012.

## Amendments issued since publication

| Amd. No. | Date | Text affected |
|---|---|---|

Copyright British Standards Institution
Provided by IHS under license with BSI - Uncontrolled Copy
No reproduction or networking permitted without license from IHS

Licensee=Hong Kong Polytechnic University/9976803100
Not for Resale, 10/16/2012 15:03:58 MDT

EUROPEAN STANDARD

NORME EUROPÉENNE

EUROPÄISCHE NORM

# EN 61439-6

August 2012

ICS 29.130.20

Supersedes EN 60439-2:2000 + A1:2005

English version

# Low-voltage switchgear and controlgear assemblies - Part 6: Busbar trunking systems (busways)

(IEC 61439-6:2012)

Ensembles d'appareillage à basse tension - Partie 6: Systèmes de canalisation préfabriquée (CEI 61439-6:2012)

Niederspannungs-Schaltgerätekombinationen - Teil 6: Schienenverteilersysteme (busways) (IEC 61439-6:2012)

This European Standard was approved by CENELEC on 2012-06-27. CENELEC members are bound to comply with the CEN/CENELEC Internal Regulations which stipulate the conditions for giving this European Standard the status of a national standard without any alteration.

Up-to-date lists and bibliographical references concerning such national standards may be obtained on application to the CEN-CENELEC Management Centre or to any CENELEC member.

This European Standard exists in three official versions (English, French, German). A version in any other language made by translation under the responsibility of a CENELEC member into its own language and notified to the CEN-CENELEC Management Centre has the same status as the official versions.

CENELEC members are the national electrotechnical committees of Austria, Belgium, Bulgaria, Croatia, Cyprus, the Czech Republic, Denmark, Estonia, Finland, Former Yugoslav Republic of Macedonia, France, Germany, Greece, Hungary, Iceland, Ireland, Italy, Latvia, Lithuania, Luxembourg, Malta, the Netherlands, Norway, Poland, Portugal, Romania, Slovakia, Slovenia, Spain, Sweden, Switzerland, Turkey and the United Kingdom.

CENELEC

European Committee for Electrotechnical Standardization
Comité Européen de Normalisation Electrotechnique
Europäisches Komitee für Elektrotechnische Normung

**Management Centre: Avenue Marnix 17, B - 1000 Brussels**

© 2012 CENELEC - All rights of exploitation in any form and by any means reserved worldwide for CENELEC members.

Ref. No. EN 61439-6:2012 E

Copyright British Standards Institution
Provided by IHS under license with BSI - Uncontrolled Copy
No reproduction or networking permitted without license from IHS

Licensee=Hong Kong Polytechnic University/9976803100
Not for Resale, 10/16/2012 15:03:58 MDT

## Foreword

The text of document 17D/452/FDIS, future edition 1 of IEC 61439-6, prepared by IEC/TC SC 17D "Low-voltage switchgear and controlgear assemblies" of IEC TC 17 "Switchgear and controlgear" was submitted to the IEC-CENELEC parallel vote and approved by CENELEC as EN 61439-6:2012.

The following dates are fixed:

| | | |
|---|---|---|
| • latest date by which the document has to be implemented at national level by publication of an identical national standard or by endorsement | (dop) | 2013-03-27 |
| • latest date by which the national standards conflicting with the document have to be withdrawn | (dow) | 2015-06-27 |

This document supersedes EN 60439-2:2000 + A1:2005.

EN 61439-6:2012 includes the following significant technical changes with respect to EN 60439-2:2000 + A1:2005:

- alignment of the second edition of EN 61439-1:2011 regarding the structure and technical content, as applicable;
- introduction of new verifications, accordingly;
- correction of inconsistencies in resistance, reactance and impedance measurements and calculations;
- numerous editorial improvements.

This standard is to be read in conjunction with EN 61439-1:2011.

Attention is drawn to the possibility that some of the elements of this document may be the subject of patent rights. CENELEC [and/or CEN] shall not be held responsible for identifying any or all such patent rights.

This document has been prepared under a mandate given to CENELEC by the European Commission and the European Free Trade Association, and supports essential requirements of EU Directive(s).

For the relationship with EU Directive see informative Annex ZZ, which is an integral part of this document.

## Endorsement notice

The text of the International Standard IEC 61439-6:2012 was approved by CENELEC as a European Standard without any modification.

The Bibliography of EN 61439-1:2011 is applicable with the addition of the following notes for the standards indicated:

| | | |
|---|---|---|
| IEC 60570:2003 | NOTE | Harmonised as EN 60570:2003 (modified). |
| IEC 60909-0:2001 | NOTE | Harmonised as EN 60909-0:2001 (not modified). |
| IEC 61439 series | NOTE | Harmonised as EN 61439 series (partly modified). |
| IEC 61534 series | NOTE | Harmonised as EN 61534 series (not modified). |

Copyright British Standards Institution
Provided by IHS under license with BSI - Uncontrolled Copy
No reproduction or networking permitted without license from IHS
Licensee=Hong Kong Polytechnic University/9976803100
Not for Resale, 10/16/2012 15:03:58 MDT

# Annex ZA
(normative)

## Normative references to international publications with their corresponding European publications

The following documents, in whole or in part, are normatively referenced in this document and are indispensable for its application. For dated references, only the edition cited applies. For undated references, the latest edition of the referenced document (including any amendments) applies.

NOTE When an international publication has been modified by common modifications, indicated by (mod), the relevant EN/HD applies.

***This clause of EN 61439-1:2011 is applicable with the addition of the following references:***

| Publication | Year | Title | EN/HD | Year |
|---|---|---|---|---|
| IEC 60332-3-10 | 2000 | Tests on electric and optical fibre cables under fire conditions - Part 3-10: Test for vertical flame spread of vertically-mounted bunched wires or cables - Apparatus | EN 60332-3-10[1)] | 2009 |
| IEC 60439-2 | 2000 | Low-voltage switchgear and controlgear assemblies - Part 2: Particular requirements for busbar trunking systems (busways) | EN 60439-2 | 2000 |
| IEC 61439-1 | 2011 | Low-voltage switchgear and controlgear assemblies - Part 1: General rules | EN 61439-1 | 2011 |
| IEC 61786 | 1998 | Measurement of low-frequency magnetic and electric fields with regard to exposure of human beings - Special requirements for instruments and guidance for measurement | - | - |
| ISO 834-1 | 1999 | Fire-resistance tests - Elements of building construction - Part 1: General requirements | - | - |

[1)] EN 60332-3-10 includes A1 to IEC 60332-3-10.

Copyright British Standards Institution
Provided by IHS under license with BSI - Uncontrolled Copy
No reproduction or networking permitted without license from IHS
Licensee=Hong Kong Polytechnic University/9976803100
Not for Resale, 10/16/2012 15:03:58 MDT

# Annex ZZ
(informative)

## Coverage of Essential Requirements of EU Directive 2004/108/EC

This European Standard has been prepared under a mandate given to CENELEC by the European Commission and the European Free Trade Association and within its scope the standard covers all relevant essential requirements as given in Article 1 of Annex I of the EU Directive 2004/108/EC.

Compliance with this standard provides one means of conformity with the specified essential requirements of the Directive concerned.

WARNING: Other requirements and other EU Directives may be applicable to the products falling within the scope of this standard.

Copyright British Standards Institution
Provided by IHS under license with BSI - Uncontrolled Copy
No reproduction or networking permitted without license from IHS
Licensee=Hong Kong Polytechnic University/9976803100
Not for Resale, 10/16/2012 15:03:58 MDT

# CONTENTS



Copyright British Standards Institution
Provided by IHS under license with BSI - Uncontrolled Copy
No reproduction or networking permitted without license from IHS
Licensee=Hong Kong Polytechnic University/9976803100
Not for Resale, 10/16/2012 15:03:58 MDT

# LOW-VOLTAGE SWITCHGEAR AND CONTROLGEAR ASSEMBLIES –

## Part 6: Busbar trunking systems (busways)

## 1 Scope

NOTE 1 Throughout this part, the abbreviation BTS is used for a busbar trunking system. Where reference to Part 1 is made, the term ASSEMBLY therefore reads as "BTS".

This part of IEC 61439 lays down the definitions and states the service conditions, construction requirements, technical characteristics and verification requirements for low voltage BTS (see 3.101) as follows:

- BTS for which the rated voltage does not exceed 1 000 V in case of a.c. or 1 500 V in case of d.c.;
- BTS intended for use in connection with the generation, transmission, distribution and conversion of electric energy, and for the control of electric energy consuming equipment;
- BTS designed for use under special service conditions, for example in ships, in rail vehicles, and for domestic applications (operated by unskilled persons), provided that the relevant specific requirements are complied with;

  NOTE 2 Supplementary requirements for BTS in ships are covered by IEC 60092-302.
- BTS designed for electrical equipment of machines. Supplementary requirements for BTS forming part of a machine are covered by the IEC 60204 series.

This standard applies to all BTS whether they are designed, manufactured and verified on a one-off basis or fully standardized and manufactured in quantity.

The manufacture and/or assembly may be carried out by a manufacturer other than the original manufacturer (see 3.10.1 and 3.10.2 of Part 1).

This standard does not apply to individual devices and self-contained components, such as motor starters, fuse switches, electronic equipment, etc. which will comply with the relevant product standard.

This standard does not apply to the specific types of ASSEMBLIES covered by other parts of the IEC 61439 series, to supply track systems in accordance with IEC 60570, to cable trunking and ducting systems in accordance with the IEC 61084 series, nor to power track systems in accordance with the IEC 61534 series.

## 2 Normative references

This clause of Part 1 is applicable except as follows.

*Addition:*

IEC 60332-3-10:2000, *Tests on electric and optical fibre cables under fire conditions – Part 3-10: Test for vertical flame spread of vertically-mounted bunched wires or cables – Apparatus*

IEC 60439-2:2000, *Low-voltage switchgear and controlgear assemblies – Part 2: Particular requirements for busbar trunking systems (busways)*

Copyright British Standards Institution
Provided by IHS under license with BSI - Uncontrolled Copy
No reproduction or networking permitted without license from IHS
Licensee=Hong Kong Polytechnic University/9976803100
Not for Resale, 10/16/2012 15:03:58 MDT

IEC 61439-1:2011, *Low-voltage switchgear and controlgear assemblies – Part 1: General rules*

IEC 61786:1998, *Measurement of low-frequency magnetic and electric fields with regard to exposure of human beings – Special requirements for instruments and guidance for measurements*

ISO 834-1:1999, *Fire-resistance tests – Elements of building construction – Part 1: General requirements*

## 3 Terms and definitions

This clause of Part 1 is applicable except as follows.

*Additional definitions:*

**3.101**
**busbar trunking system**
**BTS**
**busway**
enclosed ASSEMBLY used to distribute and control electrical energy for all types of loads, intended for industrial, commercial and similar applications, in the form of a conductor system comprising busbars which are spaced and supported by insulating material in a duct, trough or similar enclosure

[SOURCE: IEC 60050-441:1984, 441-12-07 modified]

Note 1 to entry: See 3.1.1 of Part 1 for the definition of ASSEMBLY.

Note 2 to entry: The BTS may consist of a full range of mechanical and electrical components such as:

– busbar trunking units with or without tap-off facilities;
– phase transposition, expansion, flexible, feeder and adapter units;
– tap-off units;
– additional conductors for communication and/or control.

Note 3 to entry: The term "busbar" does not presuppose the geometrical shape, size and dimensions of the conductor.

**3.102**
**busbar trunking unit**
**BTU**
unit of a BTS complete with busbars, their supports and insulation, external enclosure and any fixing and connecting means to other units, with or without tap-off facilities

Note 1 to entry: BTUs may have different geometrical shapes such as straight length, elbow, tee or cross.

**3.103**
**busbar trunking run**
**BT run**
number of BTUs connected together to form the BTS, excluding the tap-off units

**3.104**
**busbar trunking unit with tap-off facilities**
**BTU with tap-off facilities**
BTU designed to enable tap-off units to be installed at one or more points as predetermined by the original manufacturer

--`,,`,,,`,,,`,,,`,`,`,`,`,,,`,`,`,`,,,`,`-`-`,,`,,`,`,,`,---
Copyright British Standards Institution
Provided by IHS under license with BSI - Uncontrolled Copy
No reproduction or networking permitted without license from IHS
Licensee=Hong Kong Polytechnic University/9976803100
Not for Resale, 10/16/2012 15:03:58 MDT

**3.105**
**busbar trunking unit with trolley-type tap-off facilities**
**BTU with trolley-type tap-off facilities**
BTU designed to permit the use of roller- or brush-type tap-off units

**3.106**
**busbar trunking adapter unit**
**adapter BTU**
BTU intended to connect two units of the same system but of different type or of different rated current

**3.107**
**busbar trunking thermal expansion unit**
**thermal expansion BTU**
BTU intended to permit a certain movement in the axial direction of the BT run due to thermal expansion of the system

Note 1 to entry: This term does not presuppose which elements permit movement, e.g. the conductors within the enclosure or both conductors and enclosure

**3.108**
**busbar trunking phase transposition unit**
**phase transposition BTU**
BTU intended to change the relative positions of the phase conductors in order to balance the inductive reactances or to transpose the phases (such as L1-L2-L3-N to N-L3-L2-L1)

**3.109**
**flexible busbar trunking unit**
**flexible BTU**
BTU having conductors and enclosures designed to allow a specified change of direction during installation

**3.110**
**busbar trunking feeder unit**
**feeder BTU**
BTU serving as an incoming unit

Note 1 to entry: See 3.1.9 of Part 1 for the definition of incoming unit.

**3.111**
**tap-off unit**
outgoing unit, either fixed or removable, for tapping-off power from the BTU

Note 1 to entry: See 3.1.10, 3.2.1 and 3.2.2 of Part 1 for the definition of outgoing unit, fixed part and removable part.

Note 2 to entry: A plug-in tap-off unit is a removable tap-off unit (see 8.5.2) which can be connected or disconnected by manual operation

**3.112**
**busbar trunking unit for building movements**
**BTU for building movements**
BTU intended to allow for building movements due to thermal expansion, contraction and/or flexing of the building

**3.113**
**busbar trunking fire barrier unit**
**fire barrier BTU**
BTU or a part of, intended to prevent the propagation of fire through building divisions for a specified time under fire conditions

Copyright British Standards Institution
Provided by IHS under license with BSI - Uncontrolled Copy
No reproduction or networking permitted without license from IHS
Licensee=Hong Kong Polytechnic University/9976803100
Not for Resale, 10/16/2012 15:03:58 MDT

## 4 Symbols and abbreviations

This clause of Part 1 is applicable except as follows.

*Addition:*

| Symbol / Abbreviation | Term | Subclause |
|---|---|---|
| $k_{1A}$ | temperature factor of the BTS | 5.3.1 |
| $k_{1c}$ | temperature factor of a circuit | 5.3.2 |
| $k_{2c}$ | mounting factor of a circuit | 5.3.2 |
| $R$, $X$, $Z$ | phase conductor and fault-loop characteristics | 5.101 |

## 5 Interface characteristics

This clause of Part 1 is applicable except as follows.

### 5.1 General

*Replacement:*

The characteristics of the BTS shall ensure compatibility with the ratings of the circuits to which it is connected and the installation conditions and shall be declared by the BTS manufacturer using the criteria identified in 5.2 to 5.6 and 5.101 to 5.102.

The specification schedule according to informative Annex C is intended to help the user and the BTS manufacturer to meet this objective, whether the user:

- select catalogue products the characteristics of which meet their needs, and the requirements of this standard,
- and/or make a specific agreement with the manufacturer.

NOTE Annex C also relates to the topics dealt with in Clauses 6 and 7.

In some cases information provided by the BTS manufacturer may take the place of an agreement.

### 5.2.4 Rated impulse withstand voltage ($U_{imp}$) (of the ASSEMBLY)

*Replacement of the NOTE:*

NOTE Unless otherwise specified, the rated impulse withstand voltage is selected according to overvoltage category IV (origin of installation level) or III (distribution circuit level) as given in Table G.1 of Part 1.

### 5.3.1 Rated current of the ASSEMBLY ($I_{nA}$)

*Addition:*

NOTE 4 Where the BTS is not equipped with a single incoming unit at one end of the BT run, (e.g. incoming unit not installed at one end of the BTS, or more than one incoming unit), the rated currents will be subject to agreement between the user and the manufacturer.

The rated current shall apply for a specified mounting orientation (see 5.3.2). However the influence of the mounting orientation may be ignored for short (e.g. less than 3 m long) vertical sections in a horizontal BTS.

Copyright British Standards Institution
Provided by IHS under license with BSI - Uncontrolled Copy
No reproduction or networking permitted without license from IHS
Licensee=Hong Kong Polytechnic University/9976803100
Not for Resale, 10/16/2012 15:03:58 MDT

The BTS manufacturer may state the rated currents of the BTS for different ambient temperatures for example by means of the following formula:

$I'_{nA} = k_{1A}\, I_{nA}$

where $k_{1A}$ is a temperature factor, equal to 1 at an ambient air temperature of 35 °C.

In case of significant harmonic currents, special agreement shall be made for a reduction factor, if necessary.

### 5.3.2 Rated current of a circuit ($I_{nc}$)

*Addition:*

The rated current ($I_{nc}$) of each circuit (i.e. incoming unit, BTU, tap-off unit, outgoing circuit) shall be equal to or higher than its assumed loading. For tap-off units provided with more than one main outgoing circuit, see also 5.4.

The rated current shall apply for specified mounting conditions. Mounting conditions may include orientation and position, as follows:

a) orientation

   Orientation may be horizontal or vertical.

   Unless otherwise specified, the reference orientation is horizontal.

b) position

   Position may be for example edgewise or flatwise for a BT run, and/or below or on top of the BTU for a tap-off unit.

The BTS manufacturer may state different rated currents for different ambient temperatures and/or mounting conditions, where applicable, for example by means of the following formula:

$I'_{nc} = k_{1c}\, k_{2c}\, I_{nc}$

where

$k_{1c}$ is a temperature factor, equal to 1 at an ambient air temperature of 35 °C;

$k_{2c}$ is a mounting factor, equal to 1 in the reference mounting conditions.

In case of significant harmonic currents, special agreement shall be made for a reduction factor, if necessary.

## 5.4 Rated diversity factor (RDF)

*Replacement:*

For the whole BTS, unless otherwise specified, the RDF (see 3.8.11 of Part 1) shall be equal to 1, i.e. all tap-off units can be continuously and simultaneously loaded with their full rated current, within the limit of the rated current of the BT run(s) and feeder BTU(s)

NOTE 1 This is because thermal influence between tap-off units is considered negligible.

For tap-off units provided with more than one main outgoing circuit, these circuits shall be able to be continuously and simultaneously loaded at their rated current multiplied by the RDF, within the limit of the rated current of the tap-off unit. Unless otherwise specified, the RDF of such tap-off units shall be equal to the values given in Table 101.

Copyright British Standards Institution
Provided by IHS under license with BSI - Uncontrolled Copy
No reproduction or networking permitted without license from IHS
Licensee=Hong Kong Polytechnic University/9976803100
Not for Resale, 10/16/2012 15:03:58 MDT

**Table 101 – Rated diversity factor for a tap-off unit**

| Number of main outgoing circuits | Rated diversity factor |
|---|---|
| 2 and 3 | 0,9 |
| 4 and 5 | 0,8 |
| 6 to 9 inclusive | 0,7 |
| 10 (and above) | 0,6 |

The RDF is applicable with the BTS operating at rated current ($I_{nA}$)

NOTE 2 The RDF recognizes that multiple functional units are in practice not fully loaded simultaneously or are intermittently loaded.

NOTE 3 The assumed loading of the outgoing circuits can be a steady continuous current or the thermal equivalent of a varying current.

NOTE 4 In Norway, the overload protection of conductors is not solely based on the use of diversity factors of the downstream circuits.

## 5.6 Other characteristics

*Modification of item e):*

e) stationary BTS ;

*Modification of item j):*

j) enclosed BTS;

*Addition:*

aa) ability to withstand mechanical loads, either normal or heavy (see 8.1.101);

bb) resistance to flame propagation, if applicable (see 9.101);

cc) fire resistance in building penetration, if applicable (see 9.102).

*Additional subclauses:*

## 5.101 Phase conductor and fault-loop characteristics

NOTE 1 For BTS rated below 100 A, the reactances are deemed negligible.

$R$ and $X$ according to Table 102 are intended to be used to calculate voltage drops (see informative Annex AA).

Copyright British Standards Institution
Provided by IHS under license with BSI - Uncontrolled Copy
No reproduction or networking permitted without license from IHS
Licensee=Hong Kong Polytechnic University/9976803100
Not for Resale, 10/16/2012 15:03:58 MDT

**Table 102 – Phase conductor characteristics**

| **Mean phase conductor characteristics**<br>at rated current $I_{nc}$, and rated frequency $f_n$<br>Ω per-metre length | |
|---|---|
| Resistance,<br>- at an ambient air temperature of 35 °C<br>- at a conductor temperature of 20 °C | $R$<br>$R_{20}$ |
| Reactance (independent from temperature) | $X$ |
| Positive-sequence and negative-sequence impedances<br>- at an ambient air temperature of 35 °C<br>- at a conductor temperature of 20 °C | $Z = Z_{(1)} = Z_{(2)}$<br>$Z_{20} = Z_{(1)20} = Z_{(2)20}$ |
| All phase conductor characteristics may be determined according to Annex BB. | |

$R_{20}$ and $X$ according to Table 102, and fault-loop resistances and reactances according to Table 103, i.e. the total resistances and reactances of the phase conductor(s) and return path, are intended to be used to calculate fault currents according to the method of impedances (see Table 104).

$Z$ and $Z_{20}$ according to Table 102, and fault-loop zero-sequence impedances according to Table 103, i.e. the total zero-sequence impedances of the phase conductor(s) and return path, are intended to be used to calculate fault currents according to the method of symmetrical components (see Table 104).

NOTE 2 Fault currents reach their lowest value for the highest impedance values; this is deemed to happen when the BTUs are operating at $I_{nc}$ at the maximum normal ambient air temperature i.e. 35 °C, resulting in a conductor temperature of (35 + $\Delta\theta$) °C, where $\Delta\theta$ is the mean stabilized temperature rise measured according to 10.10.

Conversely fault currents reach their highest value for the lowest impedance values; this is deemed to happen when the BTUs are not operating, resulting in a conductor temperature of 20 °C, and the circuit is closed while a short-circuit is present.

**Table 103 – Fault-loop characteristics**

| **Mean fault-loop characteristics at rated frequency** $f_n$<br>Ω per-metre length | **Phase-to-phase** | **Phase-to-neutral** | **Phase-to-PEN** | **Phase-to-PE** |
|---|---|---|---|---|
| Zero-sequence impedances<br>- at an ambient air temperature of 35 °C<br>- at a conductor temperature of 20 °C | | $Z_{(0)bphN}$<br>$Z_{(0)b20phN}$ | $Z_{(0)bphPEN}$<br>$Z_{(0)b20phPEN}$ | $Z_{(0)bphPE}$<br>$Z_{(0)b20phPE}$ |
| Resistances<br>- at an ambient air temperature of 35 °C<br>- at a conductor temperature of 20 °C | $R_{bphph}$<br>$R_{b20phph}$ | $R_{bphN}$<br>$R_{b20phN}$ | $R_{bphPEN}$<br>$R_{b20phPEN}$ | $R_{bphPE}$<br>$R_{b20phPE}$ |
| Reactances (independent from temperature) | $X_{bphph}$ | $X_{bphN}$ | $X_{bphPEN}$ | $X_{bphPE}$ |
| Fault-loop zero-sequence impedances may be determined according to Annex CC.<br>Fault-loop resistances and impedances may be determined according to Annex DD. | | | | |

Copyright British Standards Institution
Provided by IHS under license with BSI - Uncontrolled Copy
No reproduction or networking permitted without license from IHS
Licensee=Hong Kong Polytechnic University/9976803100
Not for Resale, 10/16/2012 15:03:58 MDT

**Table 104 – Characteristics to be used for fault currents calculations**

| Fault currents | Method of impedances | Method of symmetrical components |
|---|---|---|
| Maximum short-circuit current | | |
| - 3-phase | $R_{20}$, $X$ | $Z_{20}$ |
| - phase-to-phase | $R_{b20phph}$, $X_{bphph}$ | $Z_{20}$ |
| - phase-to-neutral | $R_{b20phN}$, $X_{bphN}$ | $Z_{20}$ and $Z_{(0)20phN}$ |
| Minimum short-circuit current | | |
| - phase-to-phase | $R_{bphph}$, $X_{bphph}$ | $Z$ |
| - phase-to-neutral | $R_{bphN}$, $X_{bphN}$ | $Z$ and $Z_{(0)phN}$ |
| Earth fault current (phase-to-PE(N)) | $R_{bphPE(N)}$, $X_{bphPE(N)}$ | $Z$ and $Z_{(0)phPE(N)}$ |

NOTE 3 The method of symmetrical components is based on respectively summing the modulus of the fault-loop positive-, negative- and zero-sequence impedances (see IEC 60909-0). Similarly the method of impedance is based on respectively summing the modulus of the fault-loop resistances and reactances.

### 5.102 Electromagnetic field

The strength of the power frequency magnetic field in the vicinity of the BT run may be stated by the BTS manufacturer.

NOTE The magnetic field is a fast-decreasing function of the distance.

A method for measurement and calculation of the modulus of the magnetic field around the BTS is given in Annex EE.

## 6 Information

This clause of Part 1 is applicable except as follows.

### 6.1 ASSEMBLY designation marking

*Addition after the first paragraph:*

One nameplate shall be located near one end of each BTU and one on each tap-off unit.

*Replacement:*

d) IEC 61439-6.

## 7 Service conditions

This clause of Part 1 is applicable except as follows.

### 7.2 Special service conditions

*Addition:*

aa) exposure to special mechanical loads, such as lighting apparatus, additional cables, ladder supports, etc.;

bb) applications with high repetitive overcurrent, for example resistance welding;

cc) installation near highly sensitive IT equipment, such as high-speed data networks, radiology apparatus, workstation monitors, etc.;

Copyright British Standards Institution
Provided by IHS under license with BSI - Uncontrolled Copy
No reproduction or networking permitted without license from IHS
Licensee=Hong Kong Polytechnic University/9976803100
Not for Resale, 10/16/2012 15:03:58 MDT

dd) applications requiring defined performance under fire conditions, e.g. circuit integrity for a definite time.

## 8 Constructional requirements

This clause of Part 1 is applicable except as follows.

### 8.1.5 Mechanical strength

*Addition after the last paragraph:*

BTS with trolley-type tap-off facilities shall be able to carry out successfully 10 000 cycles of to-and-fro movements along the conductors of the BT run, with the sliding contacts carrying their rated current at rated voltage. In the case of a.c., the power factor of the load shall be between 0,75 and 0,8.

Compliance to this requirement is checked by the test of 10.13.

*Additional subclauses:*

### 8.1.101 Ability to withstand mechanical loads

BTS intended for horizontal installation shall be able to withstand in use normal or heavy mechanical loads as specified according to 5.6 aa).

Normal mechanical loads include the weight of the feeder unit, if not supported by its own separate fixings, and tap-off units, in addition to the weight of the BTUs.

Heavy mechanical loads include additional loads such as the weight of a person.

NOTE This statement does not imply that a BTS is a walkway.

The necessary mechanical properties may be obtained by the choice of material, its thickness, its shape, and/or by the number of and position of fixing points as indicated by the original manufacturer.

Compliance to this requirement is checked by test according to 10.2.101.

### 8.1.102 Ability of plug-in tap-off units to withstand thermal variations

Plug-in tap-off units in which the contact force is developed by the deflection of a spring member shall be able to withstand the mechanical constraints due to temperature variations when subjected to intermittent duty.

NOTE For the purpose of this requirement, a disc spring is not considered to be a spring member.

Compliance is checked by test according to 10.2.102.

### 8.2.1 Protection against mechanical impact

*Replacement:*

Where a degree of protection against mechanical impact according to IEC 62262 IK code is declared by the original manufacturer, the BTS shall be so designed that it is capable of withstanding the test according to IEC 62262 IK code (see 10.2.6).

--`,,`,,,`,,`,,`,,`,`,,`,,,,`,,,,`,,,`,`-`-`,,`,,`,`,,`---

Copyright British Standards Institution
Provided by IHS under license with BSI - Uncontrolled Copy
No reproduction or networking permitted without license from IHS

Licensee=Hong Kong Polytechnic University/9976803100
Not for Resale, 10/16/2012 15:03:58 MDT

### 8.3.2 Clearances

*Addition after the first paragraph:*

Clearances of supplementary insulation shall be not less than those specified for basic insulation. Clearances of reinforced insulation shall be dimensioned to the rated impulse voltage one step higher than those specified for basic insulation (see Table 1 of Part 1).

### 8.3.3 Creepage distances

*Addition after the third paragraph:*

Creepage distances of supplementary insulation shall be not less than those specified for basic insulation. Creepage distances of reinforced insulation shall be twice those specified for basic insulation (see Table 2 of Part 1).

#### 8.4.3.2.3 Requirements for protective conductors providing protection against the consequences of faults in external circuits supplied through the BTS

*Addition after the last paragraph:*

In BTS with trolley tap-off facilities, constructional precautions shall be taken to ensure good and permanent conductivity between the exposed conductive parts of tap-off units and the stationary exposed conductive parts, in particular when the enclosure of the fixed units is part of the protective circuit of the installation.

### 8.5.2 Removable parts

*Replacement of the third paragraph:*

A removable part may be fitted with a device, which ensures that it can only be removed and inserted after its main circuit has been switched off from the load.

*Addition:*

NOTE A tap-off unit is or is not a removable part as defined in this subclause and in 3.2.2 of Part 1, according to the manufacturer's designation.

### 8.5.5 Accessibility

This subclause of Part 1 is not applicable.

*Additional subclause:*

### 8.6.101 Correct connection between BTS units

BTUs shall be so designed as to ensure correct connection between the conductors of adjacent units forming a BTS (power circuits, auxiliary and communication circuits, PE…). This requirement may be achieved by proper identification of each connection.

BTUs and tap-off units shall be so designed as to ensure correct connection between their conductors (power circuits, auxiliary and communication circuits, PE…). This requirement shall be achieved by insertion interlocks (see 3.2.5 of Part 1).

## 9 Performance requirements

This clause of Part 1 is applicable except as follows.

--`,,`,,,`,,`,`,,`,`,,`,,,,`,,,,`-`-`,,`,,`,`,,`---

Copyright British Standards Institution
Provided by IHS under license with BSI - Uncontrolled Copy
No reproduction or networking permitted without license from IHS

Licensee=Hong Kong Polytechnic University/9976803100
Not for Resale, 10/16/2012 15:03:58 MDT

### 9.2 Temperature rise limits

*Replacement of footnote* [d] *in Table 6:*

[d] Unless otherwise specified, in the case of covers and enclosures, which are accessible but need not be touched during normal operation, a 25 K increase on these temperature-rise limits for metal surfaces and a 15 K increase on these temperature-rise limits for insulating material surfaces are permissible.

*Additional subclauses:*

### 9.101 Resistance to flame propagation

A non-flame-propagating BTS either shall not ignite or, if ignited, shall not continue to burn when the source of ignition is removed.

Compliance is checked by the flame-propagation tests according to 10.101.

### 9.102 Fire resistance in building penetration

A fire barrier BTU, if any, shall be designed to prevent the propagation of fire, for a specified time, under fire conditions, where the BTS passes through horizontal or vertical building divisions (for example, wall or floor).

Where applicable, the following times are preferred: 60 min, 90 min, 120 min, 180 min or 240 min.

This may be achieved by means of additional parts.

Compliance is checked by the fire-resistance test according to 10.102.

## 10 Design verifications

This clause of Part 1 is applicable except as follows.

### 10.1 General

*Replacement of the second paragraph:*

Where tests on the BTS have been conducted in accordance with IEC 60439-2, and the test results fulfil the requirements of this Part 6 of IEC 61439, the verification of these requirements need not be repeated.

*Addition at the end of b) Performance:*

10.101 Resistance to flame propagation;

10.102 Fire resistance in building penetration.

### 10.2.6 Mechanical impact

*Replacement:*

The BTS shall be tested according to IEC 62262.

After the test, the BTS shall continue to provide the IP code and dielectric strength; it shall be possible to remove and reinstall removable covers and tap-off units and to open and close doors, as applicable.

*Additional subclauses:*

Copyright British Standards Institution
Provided by IHS under license with BSI - Uncontrolled Copy
No reproduction or networking permitted without license from IHS
Licensee=Hong Kong Polytechnic University/9976803100
Not for Resale, 10/16/2012 15:03:58 MDT

### 10.2.101 Ability to withstand mechanical loads

#### 10.2.101.1 Test procedure for a straight busbar trunking unit

The first test shall be made on one straight BTU supported as in normal use at two positions spaced at the maximum distance $D$ specified by the original manufacturer. The location and form of the supports shall be specified by the original manufacturer. See Figure 101.

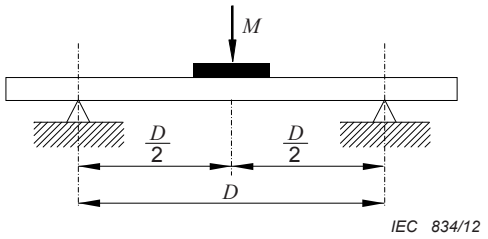


**Figure 101 – Mechanical load test of a straight unit**

A mass $M$ shall be placed without dynamic loading on a square rigid piece with sides equal to the width of the BTU, at the midpoint between the supports on top of the enclosure.

The mass $M$ shall be equal to:

- $m + m_L$ for normal loads
- $m + m_L$ + 90 kg for heavy loads

where

- $m$ is the mass of the BTU between the supports
- $m_L$ is the mass of the feeder and tap-off units specified by the original manufacturer to be connected to the length $D$.

The duration of the test shall be at least 5 min.

#### 10.2.101.2 Test procedure for a joint

A second test shall be made on two BTUs joined together and supported as in normal use at the minimum number of positions at the distances $D$ and $D_1$. The distance $D$ is that specified in 10.2.101.1; the distance $D_1$ is the maximum distance between supports adjacent to a joint as specified by the original manufacturer. The joint shall be placed midway between the supports. See Figure 102.

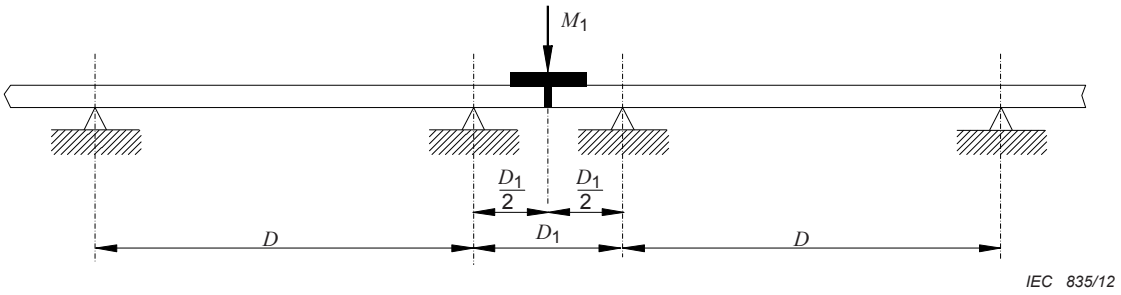


**Figure 102 – Mechanical load test of a joint**

A mass $M_1$ shall be placed without dynamic loading on top of the enclosure at the joint on a square rigid piece with sides equal to the width of the BTU.

Copyright British Standards Institution
Provided by IHS under license with BSI - Uncontrolled Copy
No reproduction or networking permitted without license from IHS
Licensee=Hong Kong Polytechnic University/9976803100
Not for Resale, 10/16/2012 15:03:58 MDT

The mass $M_1$ shall be equal to:

- $m_1 + m_{L1}$ for normal loads
- $m_1 + m_{L1}$ + 90 kg for heavy loads

where

- $m_1$ is the mass of those parts of the BTUs, including the joint, between the supports located at distance $D_1$
- $m_{L1}$ is the maximum mass of the feeder and tap-off units specified by the original manufacturer to be connected to the length $D_1$.

The duration of the test shall be at least 5 min.

#### 10.2.101.3 Resistance of the enclosure to crushing

A straight BTU shall be subjected to a crushing force, successively at four or more points, including one point between adjacent insulators, if any.

The BTU shall be supported horizontally on a flat surface and the force shall be applied through a rigid plate equal to the width of the BTU and 120 mm long.

The crushing force shall at least be equal to 4 times the weight of 1 m length, for BTS stated for normal mechanical loads; a mass of 90 kg shall be added for BTS stated for heavy mechanical loads.

The duration of the test shall be at least 5 min per point.

#### 10.2.101.4 Results to be obtained

During and after the tests according to 10.2.101.1 to 10.2.101.3, there shall be neither break, nor permanent deformation of the enclosure which would compromise the degree of protection, reduce the clearances and creepage distances to values lower than those specified in 8.3, or impair the correct insertion of incoming and outgoing units.

The protective circuit shall remain functional and the test samples shall withstand the dielectric test according to 10.9.2 of Part 1.

### 10.2.102 Thermal cycling test

#### 10.2.102.1 General

Plug-in tap-off units shall be submitted to a thermal cycling test.

#### 10.2.102.2 Test sample

If the same design of the plug assembly is used for a range of tap-off units of different rated currents or of different protective devices, a test on one combination of a BTU and a tap-off unit is considered to be representative of the range. The design of the plug assembly includes the physical characteristics and the material and surface finish (e.g. plating), if applicable.

A tap-off unit incorporating fuses shall be fitted with the maximum size of fuses specified by the original manufacturer. A tap-off unit incorporating a circuit-breaker shall be fitted with a circuit-breaker of the maximum rating specified by the original manufacturer.

The tap-off unit shall be arranged and loaded as in 10.10.2.3.6.

Copyright British Standards Institution
Provided by IHS under license with BSI - Uncontrolled Copy
No reproduction or networking permitted without license from IHS
Licensee=Hong Kong Polytechnic University/9976803100
Not for Resale, 10/16/2012 15:03:58 MDT

Prior to test, the sample is conditioned by a number of cycles of insertion and removal of the tap-off unit in the intended manner, without load current, as given in Table 105.

**Table 105 – Conditioning for the thermal cycling test**

| Rated current<br>A | Number of cycles<br>of insertion and removal |
|---|---|
| $I_{nc} \leq 63$ | 25 |
| $63 < I_{nc} \leq 200$ | 10 |
| $200 < I_{nc}$ | 5 |

### 10.2.102.3 Test procedure

The current is applied until the temperatures have stabilised. The temperatures as specified for the temperature-rise test are recorded. Both currents are switched off and the sample is allowed to return to room temperature.

The sample is then subjected to 84 cycles consisting of

a) 3 h ON at rated current and 3 h OFF, or

b) 2 h ON at rated current and 2 h OFF, if the temperatures taken at the end of the initial 2 h ON period are within 5 K of the temperatures recorded at the end of the stabilisation run.

### 10.2.102.4 Results to be obtained

The temperatures taken after the 84$^{th}$ cycle shall not be more than 5 K higher than the temperatures recorded at the end of the stabilisation run.

## 10.3 Degree of protection of ASSEMBLIES

*Replacement of the last but one paragraph:*

When traces of water could raise doubts as to the correct functioning and safety of equipment, a dielectric test according to 10.9.2 of Part 1 shall be carried out.

### 10.5.3.1 General

*Replacement:*

The short-circuit withstand strength specified by the original manufacturer shall be verified by testing according to 10.5.3.5 or comparison with a tested reference design according to 10.5.3.3.

The original manufacturer shall determine the reference design(s) to be used in 10.5.3.3.

### 10.5.3.3 Verification by comparison with a reference design – Utilising a check list

*Replacement:*

Verification is achieved when comparison of the BTS to be verified with an already tested design meets all the following requirements:

a) items 1 to 3, 5 to 6, and 8 to 10 of the check list in Table 13 of Part 1;

b) the busbar supports of each circuit of the BTS to be assessed are of the same type, shape and material, and have the same or smaller spacing along the length of the busbar as the reference design; and insulation materials are of the same type, shape and thickness.

Copyright British Standards Institution
Provided by IHS under license with BSI - Uncontrolled Copy
No reproduction or networking permitted without license from IHS
Licensee=Hong Kong Polytechnic University/9976803100
Not for Resale, 10/16/2012 15:03:58 MDT

To ensure the same current carrying capacity for that portion of the fault current that flows through the exposed conductive parts, the design, number and arrangement of the parts that provide contact between the protective conductor and the exposed conductive parts, shall be the same as in the tested reference design.

#### 10.5.3.4 Verification by comparison with a reference design – Utilising calculation

This subclause of Part 1 is not applicable.

### 10.10 Verification of temperature rise

*Replacement of the entire subclause:*

#### 10.10.1 General

It shall be verified that the temperature-rise limits specified in 9.2 for the different parts of the BTS will not be exceeded.

Verification shall be made by:

a) testing (10.10.2), and/or

b) derivation of the rated current of similar variants (10.10.3).

#### 10.10.2 Verification by testing

#### 10.10.2.1 General

Verification by test shall comprise the following:

a) if the BTS to be verified comprises a number of variants, selection of the most onerous one(s) according to 10.10.2.2:

b) verification of the selected variant(s), according to 10.10.2.3.

#### 10.10.2.2 Selection of the representative arrangements

#### 10.10.2.2.1 General

The test shall be made on representative BTUs and tap-off units, respectively selected according to 10.10.2.2.2 and 10.10.2.2.3.

3-phase/3-wire BTUs and tap-off units shall respectively be considered as representative of 3-phase/4-wire, 3-phase/5-wire and single-phase/2-wire or single-phase/3-wire BTUs and tap-off units, provided that the neutral conductor is sized equal to or greater than the phase conductors and arranged in the same manner.

The selection is the responsibility of the original manufacturer.

The original manufacturer should take into consideration the other arrangements the rated currents of which are to be derived according to 10.10.3 from the tested arrangements.

#### 10.10.2.2.2 Busbar trunking units

a) Identification of similar BTUs

BTUs consisting of rectangular section(s) of conductor per pole can be considered as similar variants of a same design, even if they are intended for different rated currents, if they fulfil all the following conditions:

- same arrangement of bars,
- same conductor spacing,

Copyright British Standards Institution
Provided by IHS under license with BSI - Uncontrolled Copy
No reproduction or networking permitted without license from IHS
Licensee=Hong Kong Polytechnic University/9976803100
Not for Resale, 10/16/2012 15:03:58 MDT

- same enclosure.

b) Selection of a representative BTU

A representative variant out of the similar variants shall fulfil all the following requirements:

- the lowest specific conductance,
- the greatest height, and thickness and cross-sectional area of the conductor,
- the least favourable ventilation (size of openings, natural or active cooling…).

Where all requirements cannot be met with a single BTU, further testing shall be carried out.

#### 10.10.2.2.3 Tap-off units

a) Identification of similar tap-off units

Tap-off units can be considered as similar variants of a same design, even if they are intended for different rated currents, if they fulfil all the following conditions:

1) the function of the main circuit is the same (e.g. cable feeder, motor starter);
2) the devices are of the same frame size and belong to the same series;
3) the mounting structure and enclosure of the tap-off unit are of the same type;
4) the mutual arrangement of the device(s) is the same;
5) the type and arrangement of conductors, including the type of connection and conductor material between tap-off unit and BTU are the same;
6) the cross-section of the main circuit conductors has a rating at least equal to that of the lowest rated device in series in the main circuit. Selection of conductors shall be as tested or in accordance with IEC 60364-5-52. Examples on how to adapt this standard for conditions inside a tap-off unit are given in Annex H of Part 1. The cross-section of bars shall be as tested or as given in Annex N of Part 1.

b) Selection of a representative tap-off unit

The maximum possible current rating for each variant of tap-off unit is established. For tap-off units containing only one device, this is the rated current of the device. For tap-off units with several devices in series in the main circuit, it is that of the device with the lowest rated current.

For each tap-off unit the power loss is calculated at the maximum possible current using the data peculiar to each device (including devices in auxiliary circuits) together with the power losses of the associated conductors in main circuits.

A representative variant out of the similar variants shall fulfil all the following requirements:

- the lowest specific conductance of main circuit conductors,
- the highest total power loss,
- the most onerous enclosure (overall dimensions, partitions and ventilation).

Where all requirements cannot be met with a single tap-off unit, further testing shall be carried out.

The original manufacturer should determine whether additional testing, in the other orientation than the reference orientation, is necessary.

### 10.10.2.3 Methods of test

#### 10.10.2.3.1 General

The temperature-rise test on the individual circuits shall be made at their rated frequency.

Copyright British Standards Institution
Provided by IHS under license with BSI - Uncontrolled Copy
No reproduction or networking permitted without license from IHS
Licensee=Hong Kong Polytechnic University/9976803100
Not for Resale, 10/16/2012 15:03:58 MDT

To produce the desired current any convenient value of the test voltage may be used.

The test currents shall be adjusted to be substantially equal in all phase conductors. Any unintentional circulation of air into the BT run under test shall be prevented (for example, by closing the ends of the enclosure).

If the tap-off unit includes fuses, these shall be fitted for the test with fuse-links as specified by the original manufacturer. The power losses of the fuse-links used for the test shall be stated in the test report. Fuse-link power loss may be determined by measurement or alternatively as declared by the fuse-link manufacturer.

In tap-off units where additional control circuits or devices can be incorporated, heating resistors shall simulate the power dissipation of these additional items.

When a control electro-magnet is energized during the test, the temperature shall be measured when thermal equilibrium is reached in both the main circuit and the control electro-magnet.

The size and disposition of external conductors used for the test shall be stated in the test report.

The test shall be made for a time sufficient for the temperature rise to reach a constant value. In practice, this condition is reached when the variation at all measured points (including the ambient air temperature) does not exceed 1 K/h.

To shorten the test, if the devices allow it, the current may be increased during the first part of the test, it being reduced to the specified test current afterwards.

#### 10.10.2.3.2 Test conductors

Subclause 10.10.2.3.2 of Part 1 applies.

#### 10.10.2.3.3 Measurement of temperatures

Thermocouples or thermometers shall be used for temperature measurements. For windings, the method of measuring the temperature by resistance variation shall generally be used.

The thermometers or thermocouples shall be protected against air currents and heat radiation.

The temperature shall be measured and recorded at all points given in 9.2. Particular attention shall be given to joints in conductors and terminals within the main circuits. Specific points are specified in 10.10.2.3.5 and 10.10.2.3.6.

For measurement of the temperature of air inside a BTS, where applicable, several measuring devices shall be arranged in convenient places.

#### 10.10.2.3.4 Ambient air temperature

The thermometers or thermocouples shall be protected against air currents and heat radiation.

The ambient temperature during the test shall be between +10 °C and +40 °C.

The ambient temperature is the average value of all measurement points of ambient air temperature.

Copyright British Standards Institution
Provided by IHS under license with BSI - Uncontrolled Copy
No reproduction or networking permitted without license from IHS
Licensee=Hong Kong Polytechnic University/9976803100
Not for Resale, 10/16/2012 15:03:58 MDT

Specific points are given in 10.10.2.3.5 and 10.10.2.3.6.

#### 10.10.2.3.5 Test of a BT run

A feeder unit and one or more representative straight lengths (see 10.10.2.2.2) shall be joined together, with all their covers in place, forming a BT run including at least two joints for a total length of at least 6 m.

BTS accessories (for example, elbows, flexible BTUs, etc.) may be incorporated in the most appropriate position along the BT run and tested by the same procedure.

This representative arrangement shall be mounted in its reference mounting conditions and tested at its rated current $I_{nc}$.

The temperature of conductors shall be measured in the middle of the BT run length, and at each joint. The temperature of the corresponding parts of the enclosure shall be measured on all free sides.

a) Horizontal orientation

The BT run shall be supported horizontally at approximately 1 m from the floor.

The ambient air temperature shall be measured in the immediate vicinity of the centre of the BT run, at the same level and at a distance of approximately 1 m from both of the longitudinal sides of the enclosure.

b) Vertical orientation

The BT run shall be arranged vertically, i.e. with at least 4 m in the vertical position and fixed to a rigid structure in accordance with the original manufacturer's instructions.

The ambient air temperature shall be measured at 1,5 m down from top end of test arrangement at a distance of approximately 1 m from each of the longitudinal sides of the enclosure.

#### 10.10.2.3.6 Test of a tap-off unit

The tap-off unit shall be fitted in the reference mounting conditions to a BT run having a rated current of not less than twice the rated current of the tap-off unit (or the nearest available).

The tap-off unit shall carry its rated current and the BT run shall carry its own rated current up to the tap-off position.

The temperature rises of joints in conductors and terminals of devices in the main circuit, and of the corresponding parts of all free sides of the enclosure of the tap-off unit shall be measured, as well as the temperature rise of conductors and corresponding parts of enclosure of the BTU where the tap-off unit is connected.

a) Horizontal orientation

The BT run shall be arranged according to 10.10.2.3.5 item a).

The tap-off unit shall be positioned as centrally as possible onto the BT run.

The ambient air temperature shall be measured in the immediate vicinity of the centre of the tap-off unit under test, at the same level and at a distance of approximately 1 m from both of the longitudinal sides of the enclosure of the tap-off unit.

b) Vertical orientation

Copyright British Standards Institution
Provided by IHS under license with BSI - Uncontrolled Copy
No reproduction or networking permitted without license from IHS
Licensee=Hong Kong Polytechnic University/9976803100
Not for Resale, 10/16/2012 15:03:58 MDT

The BT run shall be arranged according to 10.10.2.3.5 item b).

The tap-off unit shall be positioned in such a way that its centre is at a level approximately 1,5 m down from top end of BT run.

The ambient temperature shall be measured at a level of the centre of tap-off unit under test at a distance of approximately 1 m from each of the longitudinal sides of the enclosure.

#### 10.10.2.3.7 Test of a tap-off unit with several outgoing circuits

If all outgoing circuits of the tap-off unit can simultaneously and continuously be loaded with their rated current (RDF = 1), then 10.10.2.3.6 applies, with all outgoing circuits loaded to their rated current.

If the rated diversity factor is lower than 1, then the tap-off unit shall be tested in two steps:

a) each type of outgoing circuit shall be tested individually, at its rated current, according to 10.10.2.3.6.
b) the complete tap-off unit shall be loaded to its rated current and each outgoing circuit to its rated current multiplied by the rated diversity factor. If the rated current of the tap-off unit is less than the sum of the test currents of all outgoing circuits (i.e. the rated currents multiplied by the diversity factor), then the outgoing circuits shall be split into groups corresponding to the rated current of the tap-off unit. The groups shall be formed in a manner so that the highest possible temperature rise is obtained. Sufficient groups shall be formed and tests undertaken so as to include all different variants of outgoing circuits in at least one group

#### 10.10.2.3.8 Results to be obtained

At the end of the test, the temperature rise shall not exceed the values specified in Table 6 of Part 1. The apparatus shall operate satisfactorily within the voltage limits specified for them at the temperature inside the BTS.

### 10.10.3 Derivation of the rated current of the variants

#### 10.10.3.1 General

The following subclauses define how the rated current of variants can be verified by derivation from similar arrangements verified by test.

Temperature-rise tests carried out at 50 Hz are applicable to 60 Hz for rated currents up to and including 800 A. In the absence of tests at 60 Hz for currents above 800 A, the rated current at 60 Hz shall be reduced to 95 % of that at 50 Hz. Alternatively, where the maximum temperature rise at 50 Hz does not exceed 90 % of the permissible value, then de-rating for 60 Hz is not required.

Temperature-rise tests carried out at particular frequencies are applicable at the same rated current to lower frequencies, including d.c.

#### 10.10.3.2 Busbar trunking units

The rated current of similar variants of a tested BTU (see 10.10.2.2.2) shall be calculated using the following derating formula:

$$I_{n2} = I_{n1} \frac{S_2}{S_1}$$

where

Copyright British Standards Institution
Provided by IHS under license with BSI - Uncontrolled Copy
No reproduction or networking permitted without license from IHS
Licensee=Hong Kong Polytechnic University/9976803100
Not for Resale, 10/16/2012 15:03:58 MDT

$I_{n2}$ is the rated current to be calculated;

$I_{n1}$ is the rated current of the tested BTU;

$S_2$ is the cross-sectional area of the conductors of the variant BTU;

$S_1$ is the cross-sectional area of the conductors of a tested BTU.

#### 10.10.3.3 Tap-off units

The rated current of similar variants of a tested tap-off unit (see 10.10.2.2.3) shall be calculated using the following derating formula:

$$I_{\text{ntou2}} = I_{\text{max2}} \frac{I_{\text{ntou1}}}{I_{\text{max1}}}$$

where

$I_{\text{ntou2}}$ is the rated current to be calculated;

$I_{\text{ntou1}}$ is the rated current of the tested tap-off unit;

$I_{\text{max2}}$ is the maximum possible current of the variant tap-off unit;

$I_{\text{max1}}$ is the maximum possible current of the tested tap-off unit.

### 10.11.1 General

*Replacement:*

The short-circuit withstand strength rating shall be verified except where exempt according to 10.11.2 of Part 1. Verification may be by test according to 10.11.5 of Part 1 or comparison with a reference design according to 10.11.3.

The test shall be made on representative BT runs arranged in a representative structure, and on representative tap-off units, selected according to 10.11.5.1.

The selection is the responsibility of the original manufacturer.

The original manufacturer should take into consideration the other arrangements, the short-circuit current ratings of which are to be derived according to 10.11.3 from the tested arrangements.

### 10.11.3 Verification by comparison with a reference design – Utilising a check list

*Replacement:*

Verification is achieved when comparison of the BTS to be verified with an already tested design meets all the following requirements:

a) items 1 to 3, and 5 to 10 of the check list in Table 13 of Part 1;

b) the busbar supports of each circuit of the BTS to be assessed are of the same type, shape and material and have the same or smaller spacing, along the length of the busbar, as the reference design, and insulation materials are of the same type, shape and thickness.

Should any requirements in the check list not be met, verification shall be made by test according to 10.11.5 of Part 1.

### 10.11.4 Verification by comparison with a reference design – Utilising calculation

This subclause of Part 1 is not applicable.

--`,,,`,,,`,,`,,`,,`,,`,```,,,```,,,`-`-`,,`,,`,`,,`---
Copyright British Standards Institution
Provided by IHS under license with BSI - Uncontrolled Copy
No reproduction or networking permitted without license from IHS
Licensee=Hong Kong Polytechnic University/9976803100
Not for Resale, 10/16/2012 15:03:58 MDT

#### 10.11.5.1 Test arrangements

*Replacement:*

The BTS or its parts as necessary to complete the test shall be mounted as in normal use.

#### 10.11.5.3.2 Outgoing circuits

*Addition at the beginning of the subclause:*

The tap-off unit shall be fitted to a BTU, arranged as in 10.11.5.3.3, as near as practicable to the incoming end.

#### 10.11.5.3.3 Incoming circuit and main busbars

*Replacement:*

The test shall be carried out on a BTS comprising at least one feeder BTU connected to the appropriate number of straight length BTUs to obtain a length of not more than 6 m including at least one joint. For the verification of rated short-time withstand current (see 5.3.5 of Part 1) and rated peak withstand current (see 5.3.4 of Part 1), a greater length may be used provided the peak value and the r.m.s. value of the a.c. component of the test current are respectively at least equal to the rated peak withstand current and to the rated short-time withstand current (see 10.11.5.4 b) of Part 1).

BTUs not included in the above test shall be assembled as in normal use and tested separately.

#### 10.11.5.5 Results to be obtained

*Addition, after the fifth paragraph:*

Damage is acceptable for tap-off unit contacts (e.g.: trolley brushes) intended to be periodically replaced according to the manufacturer's instructions.

#### 10.11.5.6.2 Results to be obtained

*Replacement:*

The continuity and short-circuit withstand strength of the protective circuit, whether it consists of a separate conductor or the enclosure, shall not be significantly impaired.

In the case of a tap-off unit, this may be verified by measurements with a current of the order of the rated current of the tap-off unit.

In the case of a BTU, following the test and after sufficient time for the bar to cool to ambient temperature, the fault-loop resistance phase to PE $R_{\text{b20phPEN}}$ or $R_{\text{b20phPE}}$ should not be increased by more than 10 % (see 5.101).

Where the enclosure is used as the protective conductor, sparks and localised heating at joints are permitted, provided that they do not impair the electrical continuity and provided adjacent flammable parts are not ignited.

Deformation of the enclosure or of the internal partitions, barriers and obstacles due to short-circuit is permissible to the extent that the degree of protection is not apparently impaired and the clearances or creepage distances are not reduced to values which are less than those specified in 8.3 of Part 1.

--`,,`,,,`,,`,,`,`,,`,`,,`,`,,`,`,,`,`,,`,`,,`,`,,`,`,,`---

Copyright British Standards Institution
Provided by IHS under license with BSI - Uncontrolled Copy
No reproduction or networking permitted without license from IHS

Licensee=Hong Kong Polytechnic University/9976803100
Not for Resale, 10/16/2012 15:03:58 MDT

### 10.13 Mechanical operation

This subclause of Part 1 is applicable except as follows.

*Modification of the second paragraph:*

The number of operating cycles shall be 50.

*Addition after the last paragraph:*

For trolley-type tap-off units, the speed of the trolley carrying the sliding contacts and the distance through which it moves shall be determined in accordance with the operating conditions for which it is designed. If the trolley is intended to support a tool or other mechanical load, an equivalent weight shall be suspended from it during the test. After completion of the test, there shall be no mechanical or electrical defect, whether by undue pitting, burning or welding of the contacts.

*Additional subclauses:*

### 10.101 Resistance to flame-propagation

The test is suitable for all types or sizes of BTU to characterize the resistance to flame-propagation of the BTS in mounting and grouping conditions met in practice. The test shall be performed according to IEC 60332-3-10, with a flame application time of 40 min.

The test is made on a straight length BT run with at least a length of 3 m and a joint.

Three straight BT runs of the same type shall be placed vertically at regular intervals on a vertical ladder into a fire test rig; every BT run shall present a different side to the burner flame impact.

In case of large-width BT runs, the number of straight length units under test may be reduced, but in this case the test shall be repeated to carry out the three types of test concerning the orientation of the sides of the enclosure.

For BTUs with tap-off facilities, one tap-off outlet side shall be fitted as in normal use (for example, with cover), oriented to the burner, and located in the immediate vicinity of the burner flame's impact.

After burning has ceased, the BT run enclosures should be wiped clean. All soot is ignored if, when wiped off, the original surface is undamaged. Softening or any deformation of the non-metallic material is also ignored. The maximum extent of the damage is measured in metres, to one decimal place, from the bottom edge of the burner to the onset of char.

The system is deemed having passed the test if

- it does not ignite;

  NOTE Ignition of small components, which does not affect the integrity of the BT run, is ignored.

- the charred portion (external or internal) of the BT runs has not reached a height exceeding 2,5 m above the bottom edge of the burner.

### 10.102 Fire resistance in building penetrations

The test is suitable for fire barrier BTU designed to prevent the spread of fire through building penetration. The test shall be performed according to ISO 834-1 for fire resistance times of 60 min, 90 min, 120 min, 180 min or 240 min.

Copyright British Standards Institution
Provided by IHS under license with BSI - Uncontrolled Copy
No reproduction or networking permitted without license from IHS
Licensee=Hong Kong Polytechnic University/9976803100
Not for Resale, 10/16/2012 15:03:58 MDT

The test shall be made on a representative straight length BTU samples. The sample, including any additional parts, shall be mounted on a test floor and the void around the sample shall be filled with a fire seal.

The test floor shall be made of concrete; its thickness shall be in accordance with the required fire resistance time. The fire seal shall be in accordance with the fire safety building requirements.

The whole arrangement shall be mounted according to building practice and shall meet any original manufacturer's instructions.

A set of thermocouples shall be located on the unexposed side of the sample to record the surface temperatures of the fire barrier BTU enclosure.

The various dimensions according to Figure 103 shall be recorded in the test report.

The criteria of performance are as given in ISO 834-1.

The test with a test floor is valid for penetration through walls.

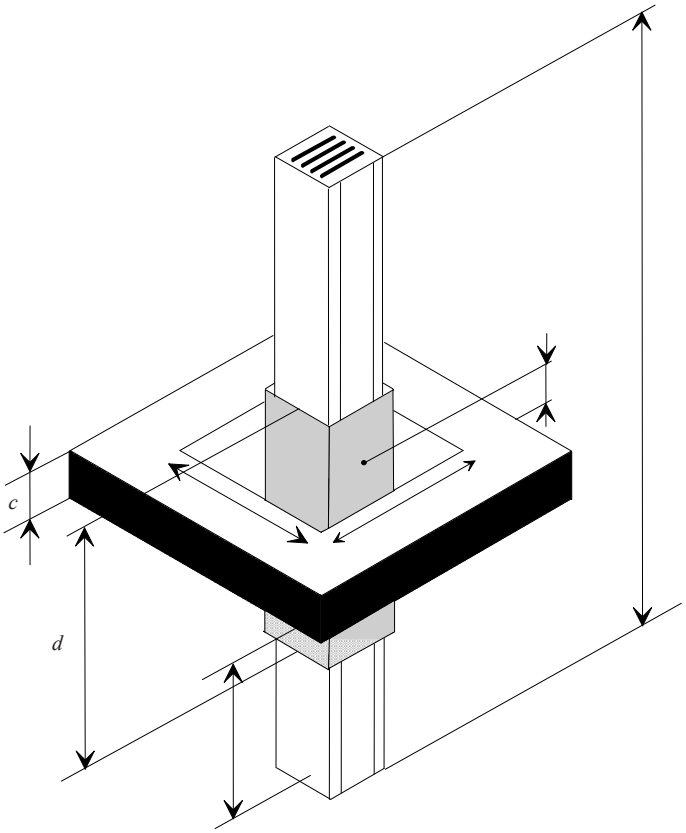


Copyright British Standards Institution
Provided by IHS under license with BSI - Uncontrolled Copy
No reproduction or networking permitted without license from IHS
Licensee=Hong Kong Polytechnic University/9976803100
Not for Resale, 10/16/2012 15:03:58 MDT

## Annexes

The annexes of Part 1 are applicable except as follows:

*Replacement of Annex C.*

*Replacement of Annex D.*

*Annexes E, O, P are not applicable.*

*Addition of Annexes AA to EE.*

Copyright British Standards Institution
Provided by IHS under license with BSI - Uncontrolled Copy
No reproduction or networking permitted without license from IHS
Licensee=Hong Kong Polytechnic University/9976803100
Not for Resale, 10/16/2012 15:03:58 MDT

# Annex C
(informative)

# Specification schedule

**Table C.1 – User specification schedule**

| Characteristics | Reference subclause | Default arrangement | Options | Req. |
|---|---|---|---|---|
| **Electrical system** | | | | |
| Earthing system | 5.6, 8.4.3.1, 8.4.3.2.3, 8.6.2, 10.5, 11.4 | Manufacturer's standard, selected to suit local requirements | TT / TN-C / TN-C-S /IT / TN-S | |
| Nominal voltage $U_n$ (V) | 3.8.9.1, 5.2.1, 8.5.3 | Local, according to installation conditions | ≤ 1 000 V a.c. or 1 500 V d.c. | |
| Transient overvoltages | 5.2.4, 8.5.3, 9.1, Annex G | Determined by the electrical system | Overvoltage category III / IV | |
| Temporary overvoltages | 9.1 | Nominal system voltage + 1 200 V | None | |
| Rated frequency $f_n$ (Hz) | 3.8.12, 5.5, 8.5.3, 10.10.2.3, 10.11.5.4 | According to local installation conditions | d.c. / 50 Hz / 60 Hz | |
| Additional on site testing requirements: wiring, and electrical working | 11.10 | Manufacturer's standard, according to application | None | |
| **Short circuit withstand capability** | | | | |
| Prospective short-circuit current at supply terminals $I_{cp}$ (kA) | 3.8.7 | Determined by the electrical system | None | |
| Prospective short-circuit current in the neutral | 10.11.5.3.5 | Max. 60 % of phase values | None | |
| Prospective short-circuit current in the protective circuit | 10.11.5.6 | Max. 60 % of phase values | None | |
| SCPD in the incoming functional unit | 9.3.2 | According to local installation conditions | Yes / No | |
| Co-ordination of short-circuit protective devices including external short-circuit protective device details | 9.3.4 | According to local installation conditions | None | |
| Data associated with loads likely to contribute to the short-circuit current | 9.3.2 | No loads likely to make a significant contribution | None | |
| Fault loop characteristics | 5.101, Annex CC, Annex DD | Manufacturer's standard | None | |

Copyright British Standards Institution
Provided by IHS under license with BSI - Uncontrolled Copy
No reproduction or networking permitted without license from IHS
Licensee=Hong Kong Polytechnic University/9976803100
Not for Resale, 10/16/2012 15:03:58 MDT

| Characteristics | Reference subclause | Default arrangement | Options | Req. |
|---|---|---|---|---|
| **Protection of persons against electric shock in accordance with IEC 60364-4-41** | | | | |
| Type of protection against electric shock – Basic protection (protection against direct contact) | 8.4.2 | Basic protection | According to local installation regulations | |
| Type of protection against electric shock – Fault protection (protection against indirect contact) | 8.4.3 | According to local installation conditions | Automatic disconnection of supply / Elec. separation / Total insulation | |
| **Installation environment** | | | | |
| Location type | 3.5, 8.1.4, 8.2 | Manufacturer's standard, according to application | Indoor / outdoor | |
| Protection against ingress of solid foreign bodies and ingress of water | 8.2.2, 8.2.3 | Indoor (enclosed): IP 2X<br>Outdoor: IP 23 | After removal of tap-off units: as for connected position / reduced protection | |
| External mechanical impact (IK) | 8.2.1, 10.2.6 | None | None | |
| Mechanical loads | 5.6, 8.1.101, 10.2.101 | Normal | Normal / heavy | |
| Resistance to UV radiation (applies for outdoor BTS only unless otherwise specified) | 10.2.4 | Indoor / outdoor | Indoor / outdoor | |
| Resistance to corrosion | 10.2.2 | Indoor / outdoor | Indoor / outdoor | |
| Ambient air temperature – Lower limit | 7.1.1 | Indoor: –5 °C<br>Outdoor: –25 °C | None | |
| Ambient air temperature – Upper limit | 7.1.1 | 40 °C | None | |
| Ambient air temperature – Daily average maximum | 7.1.1, 9.2 | 35 °C | None | |
| Maximum relative humidity | 7.1.2 | Indoor: 50 % at 40 °C<br>Outdoor: 100 % at 25 °C | None | |
| Pollution degree (of the installation environment) | 7.1.3 | Industrial: 3 | 1, 2, 3, 4 | |
| Altitude | 7.1.4 | ≤ 2 000 m | None | |
| EMC environment | 9.4, 10.12, Annex J | A / B | A / B | |
| Electromagnetic field | 5.102 | Manufacturer's standard | None | |
| Resistance to flame propagation | 5.6, 9.101, 10.101 | No | Yes / No | |
| Fire resistance in building penetration | 5.6, 9.102, 10.102 | 0 min | 0 / 60 / 90 / 120 / 180 / 240 min | |
| Special service conditions (e.g. exceptional condensation, heavy pollution, corrosive environment, fungus, small creatures, strong electric or magnetic fields, installation near highly sensitive IT equipment, explosion hazards, defined performances under fire conditions, heavy vibration and shocks, earthquakes, special mechanical loads, high repetitive overcurrent) | 7.2, 8.5.4, 9.3.3 Table 7 | No special service conditions | None | |

Copyright British Standards Institution
Provided by IHS under license with BSI - Uncontrolled Copy
No reproduction or networking permitted without license from IHS
Licensee=Hong Kong Polytechnic University/9976803100
Not for Resale, 10/16/2012 15:03:58 MDT

| Characteristics | Reference subclause | Default arrangement | Options | Req. |
|---|---|---|---|---|
| **Installation method** | | | | |
| Type | 3.3, 5.6 | Manufacturer's standard | Horizontal / Vert. edgewise / flatwise | |
| Maximum overall dimensions and weight | 5.6, 6.2.1 | Manufacturer's standard, according to application | None | |
| External conductor type(s) | 8.8 | Manufacturer's standard | Cable / BTS | |
| Direction(s) of external conductors | 8.8 | Manufacturer's standard | None | |
| External conductor material | 8.8 | Copper | Cu / Al | |
| External phase conductor, cross sections, and terminations | 8.8 | As defined within the standard | None | |
| External PE, N, PEN conductors cross sections, and terminations | 8.8 | As defined within the standard | None | |
| Special terminal identification requirements | 8.8 | Manufacturer's standard | None | |
| **Storage and handling** | | | | |
| Maximum dimensions and weight of transport units | 6.2.2, 10.2.5 | Manufacturer's standard | None | |
| Methods of transport (e.g. forklift, crane) | 6.2.2, 8.1.6 | Manufacturer's standard | None | |
| Environmental conditions different from the service conditions | 7.3 | As service conditions | None | |
| Packing details | 6.2.2 | Manufacturer's standard | None | |
| **Operating arrangements** | | | | |
| Isolation of external outgoing circuits | 8.5.2 | Manufacturer's standard | None | |
| **Maintenance and upgrade capabilities** | | | | |
| Accessibility in service by ordinary persons; requirement to operate devices or change components while the BTS is energised | 8.4.6.1 | Basic protection | None | |
| Accessibility for inspection and similar operations | 8.4.6.2.2 | No requirements for accessibility | None | |
| Accessibility for maintenance in service by authorized persons | 8.4.6.2.3 | No requirements for accessibility | None | |
| Accessibility for extension in service by authorized persons | 8.4.6.2.4 | No requirements for accessibility | None | |
| Method of functional units connection | 8.5.1, 8.5.2 | Manufacturer's standard | Fixed / disconnectable | |
| Protection against direct contact with hazardous live internal parts during maintenance or upgrade (e.g. functional units, main busbars, distribution busbars) | 8.4 | No requirements | None | |

Copyright British Standards Institution
Provided by IHS under license with BSI - Uncontrolled Copy
No reproduction or networking permitted without license from IHS
Licensee=Hong Kong Polytechnic University/9976803100
Not for Resale, 10/16/2012 15:03:58 MDT

| Characteristics | Reference subclause | Default arrangement | Options | Req. |
|---|---|---|---|---|
| **Current carrying capability** | | | | |
| Rated current of the BTS $I_{nA}$ (A) | 3.8.9.1, 5.3, 8.4.3.2.3, 8.5.3, 8.8, 10.10.2, 10.10.3, 10.11.5 | Manufacturer's standard, according to application | None | |
| Significant harmonic currents | 5.3.1, 5.3.2 | Manufacturer's standard, according to application | None | |
| Phase conductors characteristics / voltage drop | 5.101, Annex BB | Manufacturer's standard | None | |
| Rated current of circuits $I_{nc}$ (A) | 5.3.2 | Manufacturer's standard, according to application | None | |
| Rated diversity factor | 5.4, 10.10.2.3 | For BTS and tap-off units with single outgoing circuits: 1, For tap-off units with multiple outgoing circuits: see Table 101 | None | |
| Ratio of cross section of the neutral conductor to phase conductors up to and including 16 mm$^2$ | 8.6.1 | 100 % | None | |
| Ratio of cross section of the neutral conductor to phase conductors above 16 mm$^2$ | 8.6.1 | 50 % (min. 16 mm$^2$) | None | |

Copyright British Standards Institution
Provided by IHS under license with BSI - Uncontrolled Copy
No reproduction or networking permitted without license from IHS
Licensee=Hong Kong Polytechnic University/9976803100
Not for Resale, 10/16/2012 15:03:58 MDT

# Annex D
(informative)

# Design verification

## Table D.1 – Design verifications

| No. | Characteristic to be verified | Subclauses | Verification options available | | |
|---|---|---|---|---|---|
| | | | Testing | Comparison with a reference design | Assess-ment |
| 1 | Strength of material and parts: | | | | |
| | Resistance to corrosion | 10.2.2 | YES | NO | NO |
| | Properties of insulating materials: | | | | |
| | Thermal stability | 10.2.3.1 | YES | NO | NO |
| | Resistance to abnormal heat and fire due to internal electric effects | 10.2.3.2 | YES | NO | YES |
| | Resistance to ultra-violet (UV) radiation | 10.2.4 | YES | NO | YES |
| | Lifting | 10.2.5 | YES | NO | NO |
| | Mechanical impact | 10.2.6 | YES | NO | NO |
| | Marking | 10.2.7 | YES | NO | NO |
| | Ability to withstand mechanical loads | 10.2.101 | YES | NO | NO |
| | Thermal cycling test | 10.2.102 | YES | NO | NO |
| 2 | Degree of protection of enclosures | 10.3 | YES | NO | YES |
| 3 | Clearances | 10.4 | YES | NO | NO |
| 4 | Creepage distances | 10.4 | YES | NO | NO |
| 5 | Protection against electric shock and integrity of protective circuits: | | | | |
| | Effective continuity between the exposed conductive parts of the BTS and the protective circuit | 10.5.2 | YES | NO | NO |
| | Short-circuit withstand strength of the protective circuit | 10.5.3 | YES | YES | NO |
| 6 | Incorporation of switching devices and components | 10.6 | NO | NO | YES |
| 7 | Internal electrical circuits and connections | 10.7 | NO | NO | YES |
| 8 | Terminals for external conductors | 10.8 | NO | NO | YES |
| 9 | Dielectric properties: | | | | |
| | Power-frequency withstand voltage | 10.9.2 | YES | NO | NO |
| | Impulse withstand voltage | 10.9.3 | YES | NO | YES |
| 10 | Temperature-rise limits | 10.10 | YES | YES | NO |
| 11 | Short-circuit withstand strength | 10.11 | YES | YES | NO |
| 12 | Electromagnetic compatibility (EMC) | 10.12 | YES | NO | YES |
| 13 | Mechanical operation | 10.13 | YES | NO | NO |
| 14 | Resistance to flame propagation | 10.101 | YES | NO | NO |
| 15 | Fire resistance in building penetration | 10.102 | YES | NO | NO |

Copyright British Standards Institution
Provided by IHS under license with BSI - Uncontrolled Copy
No reproduction or networking permitted without license from IHS
Licensee=Hong Kong Polytechnic University/9976803100
Not for Resale, 10/16/2012 15:03:58 MDT

# Annex AA
(informative)

## Voltage drop of the system

The voltage drop of the BTS can be calculated using the following formulae:

$$u = k\sqrt{3}\left(R\cos\varphi + X\sin\varphi\right)I_B\ L$$

where

$u$ is the composite voltage drop of the system, expressed in volts (V);

$R$ and $X$ are the mean resistance and reactance according to 5.101, expressed in ohms per metre (Ω/m);

$I_B$ is the current of the circuit being considered, expressed in amperes (A);

$L$ is the length of the system being considered, expressed in metres (m);

$\cos\varphi$ is the load power factor being considered;

$k$ is the load distribution factor, calculated as follows:

– to calculate the voltage drop at the end of a BT run, $k$ is equal to:

- 1 if the load is concentred at the end of the BT run;
- $\frac{n+1}{2n}$ if the load is uniformly spread between $n$ branches.

– to calculate the voltage drop at the origin of a branch situated at a distance $d$ from the origin of the BT run, $k$ is equal to $(2n+1-n\ d/L)/2n$ for loads spread uniformly along the BT run.

A pre-calculated voltage drop table may be provided by the original manufacturer, in volts per ampere and per metre length for different power factors in order to facilitate basic calculations.

Copyright British Standards Institution
Provided by IHS under license with BSI - Uncontrolled Copy
No reproduction or networking permitted without license from IHS
Licensee=Hong Kong Polytechnic University/9976803100
Not for Resale, 10/16/2012 15:03:58 MDT

# Annex BB
(informative)

## Phase conductor characteristics

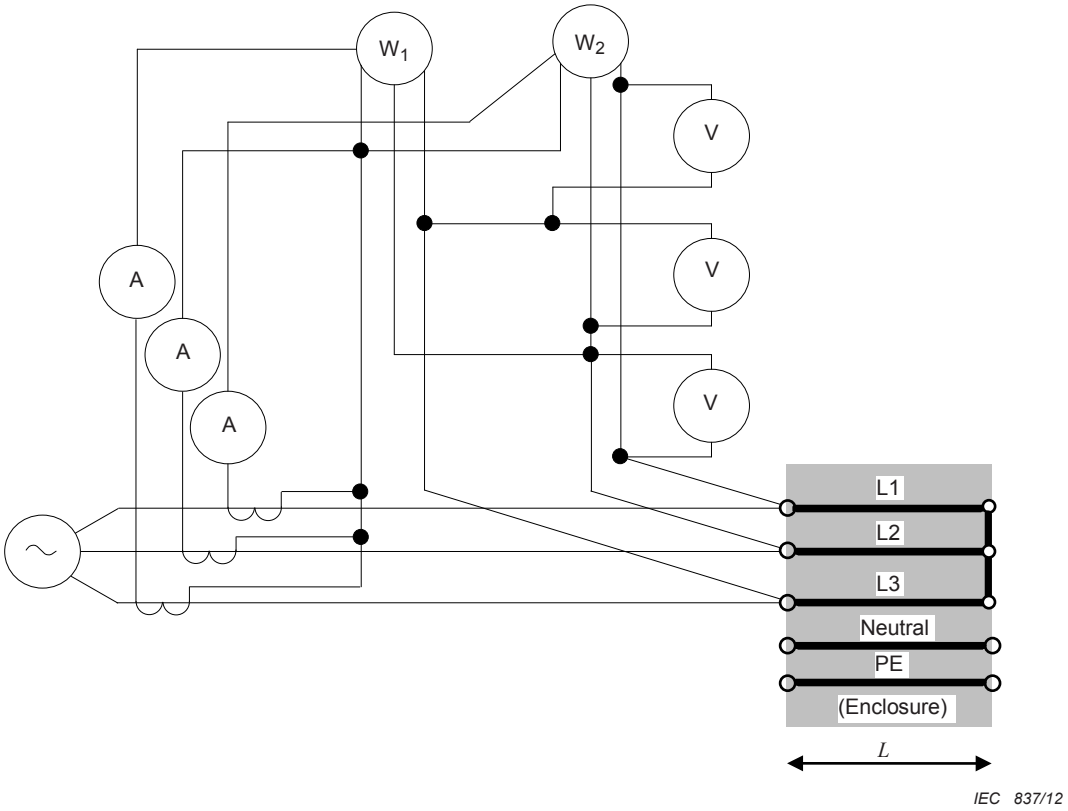


**Figure BB.1 – Phase conductors characteristics determination**

Short-circuit all phase conductors at the output end of the test sample (star-point).

Record the measurements during the temperature-rise test or use the same arrangement and conditions (see 10.10.2), including phase currents as near as possible to the rated current.

Take the following measurements, according to Figure BB.1:

| | |
|---|---|
| $L$ | length of the BT run, from the voltmeter leads connected at the input end to the point where the phase conductors are connected together at the output end, expressed in metres (m); |
| $\theta$ | ambient air temperature, expressed in °C; |
| $\Delta\theta$ | mean stabilized temperature rise of the phase conductors, expressed in °C; |
| $V_{12}$, $V_{23}$, $V_{31}$ | r.m.s. phase-to-phase voltage drops, expressed in volts (V); |
| $I_1$, $I_2$, $I_3$ | r.m.s. currents, expressed in amperes (A); |
| $P$ | total active power determined through wattmeters $W_1$ and $W_2$, expressed in watts (W). |

NOTE 1 The total active power can also be determined through three wattmeters.

Copyright British Standards Institution
Provided by IHS under license with BSI - Uncontrolled Copy
No reproduction or networking permitted without license from IHS
Licensee=Hong Kong Polytechnic University/9976803100
Not for Resale, 10/16/2012 15:03:58 MDT

Calculate the mean r.m.s. current and phase-to-phase voltage drop, as follows:

$$V = \frac{(V_{12} + V_{23} + V_{31})}{3}$$

$$I = \frac{(I_1 + I_2 + I_3)}{3}$$

Calculate the mean per metre-length impedance $Z_\theta$ and resistance $R_\theta$, at the ambient air temperature $\theta$, and reactance $X$, independent from the temperature, of each phase conductor, as follows:

$$Z_\theta = \frac{V}{\sqrt{3} I L}$$

$$R_\theta = \frac{P}{3 I^2 L}$$

$$X = (Z_\theta{}^2 - R_\theta{}^2)^{1/2}$$

NOTE 2 One can also measure the r.m.s. phase-to-star-point voltage drop $V_x$ and power $P_x$ in each individual phase, calculate each impedance $Z_{\theta x} = V_x / (I_x L)$, each resistance $R_{\theta x} = P_x / (I_x^2 L)$ and each reactance $X_x = (Z_{\theta x}{}^2 - R_{\theta x}{}^2)^{1/2}$, and finally calculate their mean values.

NOTE 3 Instead of the power, one can also measure the r.m.s. phase-to-star-point voltage drop $V_x$ and the displacement $\varphi_x$ between voltage and current for each phase, calculate each impedance $Z_{\theta x} = V_x / (I_x L)$, each resistance $R_{\theta x} = Z_x \cos\varphi_x / L$, each reactance $X_x = Z_x \sin\varphi_x / L$, and finally calculate their mean values.

Calculate $R_{20}$ and $Z_{(1)20}$ (when the BTS is not operating and the conductors are at the temperature of +20 °C), and $R$ and $Z_{(1)}$ (when the BTS is operating at $I_{nC}$ at the ambient air temperature of +35 °C), as follows:

| |
|---|
| $R_{20} = \dfrac{R_\theta}{1 + 0{,}004\,(\theta + \Delta\theta - 20)}$ |
| $R = R_{20}\left[1 + 0{,}004\,(35 + \Delta\theta - 20)\right] = R_\theta \dfrac{1 + 0{,}004\,(35 + \Delta\theta - 20)}{1 + 0{,}004\,(\theta + \Delta\theta - 20)}$ |
| $Z_{(1)20} = Z_{(2)20} = Z_{20} = (R_{20}^2 + X^2)^{1/2}$ |
| $Z_{(1)} = Z_{(2)} = Z = (R^2 + X^2)^{1/2}$ |

NOTE 4 $Z_{(1)}$, $Z_{(1)20}$, $Z_{(2)}$ and $Z_{(2)20}$ are the positive and negative phase-sequence impedances of the BTS.

Copyright British Standards Institution
Provided by IHS under license with BSI - Uncontrolled Copy
No reproduction or networking permitted without license from IHS
Licensee=Hong Kong Polytechnic University/9976803100
Not for Resale, 10/16/2012 15:03:58 MDT

# Annex CC
(informative)

## Fault-loop zero-sequence impedances

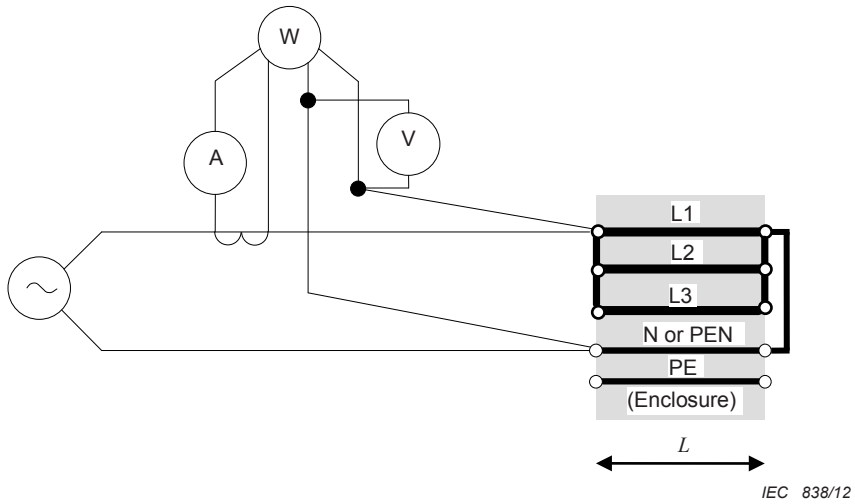


**Figure CC.1 – Fault loop zero-sequence impedances determination**

Successively connect the paralleled phase conductors of the test sample to the N, PE and PEN conductor.

Use the same arrangement as for the BT run temperature rise test (see 10.10.2) except that the phase current may be less than the rated current $I_{nc}$ and/or only applied for the duration necessary to record the measurements listed below.

Where the enclosure is intended to be used as a part of the protective conductor, bond it to the PE/PEN as in normal use, in accordance with the original manufacturer's instructions. Where the enclosure is intended to be used as the only protective conductor and there is no separate PE/PEN conductor, make the measurement between the phase conductors and the PE terminal of the enclosure.

NOTE 1 Resistances, reactances and impedances under fault conditions can significantly differ from those at rated current, especially when the enclosure is used as the protective conductor or as a part of it. In this case the original manufacturer should determine a value and duration of the current representative of the fault conditions, while preventing excessive temperature rise.

Take the following measurements:

$L$ length of the BT run, from the voltmeter leads connected at the input end where the phase conductors are connected together, to the output end where the phase conductors are also connected together, expressed in metres (m);

$\theta$, ambient air temperature, expressed in °C;

NOTE 2 The initial conductor temperature is equal to the ambient air temperature, and the temperature rise is deemed to be negligible for the time of the measurements.

$V_x$ r.m.s. voltage drop of the fault loop, expressed in volts (V);

$I_x$ total r.m.s. current, expressed in amperes (A);

$P_x$ active power, expressed in watts (W);

Copyright British Standards Institution
Provided by IHS under license with BSI - Uncontrolled Copy
No reproduction or networking permitted without license from IHS
Licensee=Hong Kong Polytechnic University/9976803100
Not for Resale, 10/16/2012 15:03:58 MDT

where $x$ depends on the type of fault-loop (see Figure CC.1):

– phase-to-neutral;
– phase-to-PEN;
– phase-to-PE.

NOTE 3 Instead of $P_x$, one can also measure the displacements $\varphi_x$ between voltage and current and calculate $P_x = V_x I_x \cos\varphi_x$.

Calculate the corresponding per metre-length fault-loop zero-sequence impedances $Z_{(0)b\theta x}$, and resistances $R_{(0)b\theta x}$, at the ambient air temperature $\theta$, and the reactances $X_{(0)bx}$, independent from the temperature, as follows:

| |
|---|
| $Z_{(0)b\theta x} = \dfrac{V_x}{(I_x/3)\,L} = 3\dfrac{V_x}{I_x\,L}$ |
| $R_{(0)b\theta xx} = \dfrac{P_x/3}{(I_x/3)^2\,L} = 3\dfrac{P_x}{I_x^{\,2}\,L}$ |
| $X_{(0)bx} = (Z^2_{(0)\theta x} - R^2_{(0)\theta x})^{1/2}$ |

Calculate $R_{(0)b20x}$ and $Z_{(0)b20x}$ (for the BTS not operating at the conductor temperature of 20 °C) and $R_{(0)bx}$ and $Z_{(0)bx}$ (for the BTS operating at $I_{nC}$ at the ambient air temperature of 35 °C) as follows:

| |
|---|
| $R_{(0)b20x} = \dfrac{R_{(0)b\theta x}}{1 + 0{,}004\,(\theta - 20)}$ |
| $R_{(0)bx} = R_{(0)b20x}\left[1 + 0{,}004\,(35 + \Delta\theta - 20)\right] = R_{(0)b\theta x}\,\dfrac{1 + 0{,}004\,(35 + \Delta\theta - 20)}{1 + 0{,}004\,(\theta - 20)}$ |

where $\Delta\theta$ is the mean stabilized temperature rise of the phase conductors as measured in Annex BB or during the temperature rise test.

| |
|---|
| $Z_{(0)b20x} = (R^2_{(0)b20x} + X^2_{(0)bx})^{1/2}$ |
| $Z_{(0)bx} = (R^2_{(0)bx} + X^2_{(0)bx})^{1/2}$ |

Copyright British Standards Institution
Provided by IHS under license with BSI - Uncontrolled Copy
No reproduction or networking permitted without license from IHS
Licensee=Hong Kong Polytechnic University/9976803100
Not for Resale, 10/16/2012 15:03:58 MDT

# Annex DD
(informative)

## Fault-loop resistances and reactances

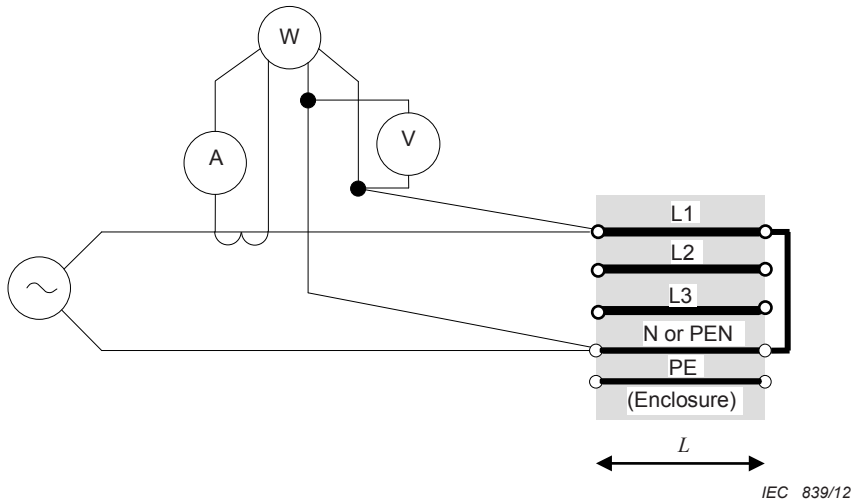


**Figure DD.1 – Fault loop resistances and reactances determination**

Successively connect each of the phase conductors to each of the other conductors.

Use the same arrangement as for the BT run temperature rise test (see 10.10.2) except that the current may be less than $I_{nc}$ and / or only applied for the duration necessary to record the measurements listed below.

Where the enclosure is intended to be used as a part of the protective conductor, bond it to the PE/PEN as in normal use, in accordance with the original manufacturer's instructions. Where the enclosure is intended to be used as the only protective conductor and there is no separate PE/PEN conductor, make the measurement between the phase conductors and the PE terminal of the enclosure.

NOTE 1 Resistances, reactances and impedances under fault conditions can significantly differ from those at rated current, especially when a metallic enclosure is used as the protective conductor or as a part of it. In this case the original manufacturer determines a value and duration of the current representative of the fault conditions, while preventing excessive temperature rise.

Take the following measurements:

$L$ length of the BT run, from the voltmeter leads connected at the input end to the point where each of the phase conductors is successively connected to each of the other conductors (phase, N, PEN, PE) at the output end, expressed in metres (m);

$\theta$ ambient air temperature, expressed in °C;

NOTE 2 The initial conductor temperature is equal to the ambient air temperature, and the temperature rise is deemed to be negligible for the time of the measurements.

$V_{xx}$ r.m.s. voltage drop of the fault loop, expressed in volts (V);

$I_{xx}$ r.m.s. current, expressed in amperes (A);

$P_{xx}$ active power, expressed in watts (W);

Copyright British Standards Institution
Provided by IHS under license with BSI - Uncontrolled Copy
No reproduction or networking permitted without license from IHS
Licensee=Hong Kong Polytechnic University/9976803100
Not for Resale, 10/16/2012 15:03:58 MDT

where $xx$ depends on the type of fault-loop coupling (see Figure DD.1):

– phase-to-phase: ($ph_1$ to $ph_2$, $ph_2$ to $ph_3$, $ph_3$ to $ph_1$);
– phase-to-neutral: ($ph_1$ to N, $ph_2$ to N, $ph_3$ to N);
– phase-to-PEN: ($ph_1$ to PEN, $ph_2$ to PEN, $ph_3$ to PEN);
– phase-to-PE: ($ph_1$ to PE, $ph_2$ to PE, $ph_3$ to PE).

NOTE 3 Instead of $P_{xx}$, one can also measure the displacements $\varphi_{xx}$ between voltage and current and calculate $P_{xx} = V_{xx} I_{xx} \cos\varphi_{xx}$.

Calculate the corresponding per metre-length fault-loop impedances $Z_{b\theta xx}$ and resistances $R_{b\theta xx}$, at the ambient air temperature $\theta$, and the reactances $X_{bxx}$, independent from the temperature, as follows:

$$Z_{b\theta xx} = \frac{V_{xx}}{I_{xx}\ L}$$

$$R_{b\theta xx} = \frac{P_{xx}}{I_{xx}{}^{2} L}$$

$$X_{bxx} = (Z^2_{b\theta xx} - R^2_{b\theta xx})^{1/2}$$

Calculate the corresponding mean fault-loop values, as follows:

– phase-to-phase:

$$R_{b\theta ph\,ph} = 1/3\,(R_{b\theta ph1\,ph2} + R_{b\theta ph2\,ph3} + R_{b\theta ph3\,ph1})$$

$$X_{bph\,ph} = 1/3(X_{b\,ph1\,ph2} + X_{bph2\,ph3} + X_{bph3\,ph1})$$

– phase-to-x:

$$R_{b\theta ph\,x} = 1/3(R_{b\theta ph1\,x} + R_{b\theta ph2\,x} + R_{b\theta ph3\,x})$$

$$X_{bph\,x} = 1/3(X_{bph1\,x} + X_{bph2\,x} + X_{bph3\,x})$$

Calculate $R_{b20xx}$ (for the BTS not operating at the conductor temperature of 20 °C), and $R_{b\,xx}$ (for the BTS operating at $I_{nC}$ at the ambient air temperature of 35 °C):

$$R_{b20xx} = \frac{R_{b\theta xx}}{1 + 0{,}004\,(\theta - 20)}$$

$$R_{bx\,x} = R_{b\,20\,xx}\left[1 + 0{,}004\,(35 + \Delta\theta - 20)\right] = R_{b\,\theta\,xx}\,\frac{1 + 0{,}004\,(35 + \Delta\theta - 20)}{1 + 0{,}004\,(\theta - 20)}$$

where $\Delta\theta$ is the mean stabilized temperature rise of the phase conductors as measured in Annex BB or during the temperature rise test.

Copyright British Standards Institution
Provided by IHS under license with BSI - Uncontrolled Copy
No reproduction or networking permitted without license from IHS
Licensee=Hong Kong Polytechnic University/9976803100
Not for Resale, 10/16/2012 15:03:58 MDT

# Annex EE
(informative)

## Determination of the magnetic field in the vicinity of the BTS

Where specified, the magnetic field should be measured as follows.

*Dimensions in millimetres*

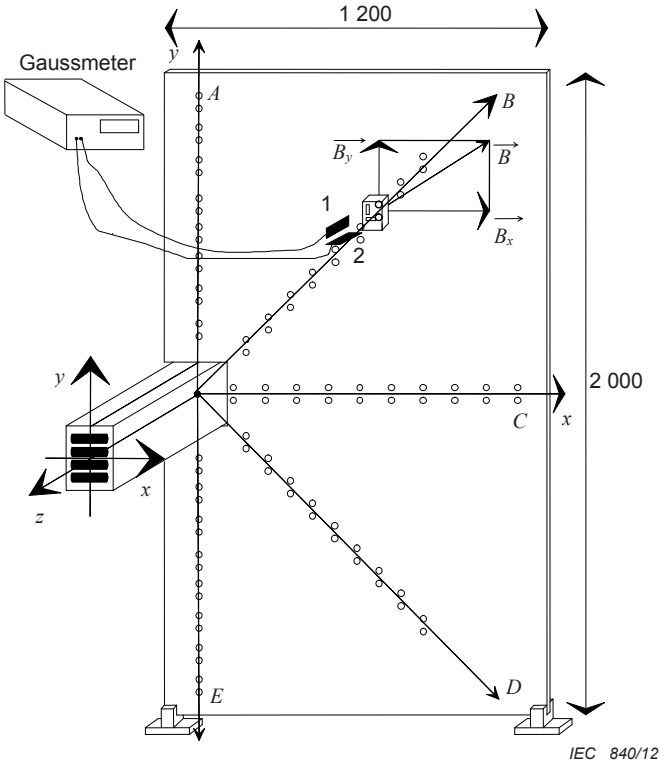


**Figure EE.1 – Magnetic field measurement arrangement**

A straight BTU run, of at least 3 m, is supported horizontally along the axis $z$.

A measurement block (made of plastic material) can be located and fixed in predetermined positions on a panel (made of plywood or plastic material) along five measurement axes $A(+y)$, $B$, $C(x)$, $D$, $E(-y)$.

This measurement block is able to accommodate one or two magnetic field gauges, which are oriented in a constant perpendicular position from the reference axes $x$ or $y$.

For each predetermined location of the panel, the magnetic field vector components are measured from a gaussmeter,

All measurements are made according to IEC 61786.

The modulus of the local magnetic field is given by the formula $B = (B_x^{\,2} + B_y^{\,2})^{1/2}$ (T).

Copyright British Standards Institution
Provided by IHS under license with BSI - Uncontrolled Copy
No reproduction or networking permitted without license from IHS
Licensee=Hong Kong Polytechnic University/9976803100
Not for Resale, 10/16/2012 15:03:58 MDT

# Bibliography

The bibliography of Part 1 is applicable except as follows:

*Addition:*

IEC 60570:2003, *Electrical supply track systems for luminaires*

IEC 60909-0:2001, *Short-circuit currents in three-phase a.c. systems – Part 0: Calculation of currents*

IEC 61084 (all parts), *Cable trunking and ducting systems for electrical installations*

IEC 61439 (all parts), *Low voltage switchgear and controlgear assemblies*

IEC 61534 (all parts), *Powertrack systems*

--`,,`,,,`,,`,,`,,`,`,,,,`,,,,`,,,`-`-`,,`,,`,`,,`---

Copyright British Standards Institution
Provided by IHS under license with BSI - Uncontrolled Copy
No reproduction or networking permitted without license from IHS

Licensee=Hong Kong Polytechnic University/9976803100
Not for Resale, 10/16/2012 15:03:58 MDT

*This page deliberately left blank*

Copyright British Standards Institution
Provided by IHS under license with BSI - Uncontrolled Copy
No reproduction or networking permitted without license from IHS

Licensee=Hong Kong Polytechnic University/9976803100
Not for Resale, 10/16/2012 15:03:58 MDT

*This page deliberately left blank*

Copyright British Standards Institution
Provided by IHS under license with BSI - Uncontrolled Copy
No reproduction or networking permitted without license from IHS

Licensee=Hong Kong Polytechnic University/9976803100
Not for Resale, 10/16/2012 15:03:58 MDT

# British Standards Institution (BSI)

BSI is the independent national body responsible for preparing British Standards and other standards-related publications, information and services. It presents the UK view on standards in Europe and at the international level.

BSI is incorporated by Royal Charter. British Standards and other standardisation products are published by BSI Standards Limited.

## Revisions

British Standards and PASs are periodically updated by amendment or revision. Users of British Standards and PASs should make sure that they possess the latest amendments or editions.

It is the constant aim of BSI to improve the quality of our products and services. We would be grateful if anyone finding an inaccuracy or ambiguity while using British Standards would inform the Secretary of the technical committee responsible, the identity of which can be found on the inside front cover. Similary for PASs, please notify BSI Customer Services.

**Tel: +44 (0)20 8996 9001 Fax: +44 (0)20 8996 7001**

BSI offers BSI Subscribing Members an individual updating service called PLUS which ensures that subscribers automatically receive the latest editions of British Standards and PASs.

**Tel: +44 (0)20 8996 7669 Fax: +44 (0)20 8996 7001**
**Email: plus@bsigroup.com**

## Buying standards

You may buy PDF and hard copy versions of standards directly using a credit card from the BSI Shop on the website **www.bsigroup.com/shop.** In addition all orders for BSI, international and foreign standards publications can be addressed to BSI Customer Services.

**Tel: +44 (0)20 8996 9001 Fax: +44 (0)20 8996 7001**
**Email: orders@bsigroup.com**

In response to orders for international standards, BSI will supply the British Standard implementation of the relevant international standard, unless otherwise requested.

## Information on standards

BSI provides a wide range of information on national, European and international standards through its Knowledge Centre.

**Tel: +44 (0)20 8996 7004 Fax: +44 (0)20 8996 7005**
**Email: knowledgecentre@bsigroup.com**

BSI Subscribing Members are kept up to date with standards developments and receive substantial discounts on the purchase price of standards. For details of these and other benefits contact Membership Administration.

**Tel: +44 (0)20 8996 7002 Fax: +44 (0)20 8996 7001**
**Email: membership@bsigroup.com**

Information regarding online access to British Standards and PASs via British Standards Online can be found at **www.bsigroup.com/BSOL**

Further information about British Standards is available on the BSI website at **www.bsi-group.com/standards**

## Copyright

All the data, software and documentation set out in all British Standards and other BSI publications are the property of and copyrighted by BSI, or some person or entity that own copyright in the information used (such as the international standardisation bodies) has formally licensed such information to BSI for commerical publication and use. Except as permitted under the Copyright, Designs and Patents Act 1988 no extract may be reproduced, stored in a retrieval system or transmitted in any form or by any means – electronic, photocopying, recording or otherwise – without prior written permission from BSI. This does not preclude the free use, in the course of implementing the standard, of necessary details such as symbols, and size, type or grade designations. If these details are to be used for any other purpose than implementation then the prior written permission of BSI must be obtained. Details and advice can be obtained from the Copyright & Licensing Department.

**Tel: +44 (0)20 8996 7070**
**Email: copyright@bsigroup.com**

**BSI**

389 Chiswick High Road London W4 4AL UK

Tel +44 (0)20 8996 9001
Fax +44 (0)20 8996 7001
www.bsigroup.com/standards

*raising standards worldwide*™

Copyright British Standards Institution
Provided by IHS under license with BSI - Uncontrolled Copy
No reproduction or networking permitted without license from IHS

Licensee=Hong Kong Polytechnic University/9976803100
Not for Resale, 10/16/2012 15:03:58 MDT