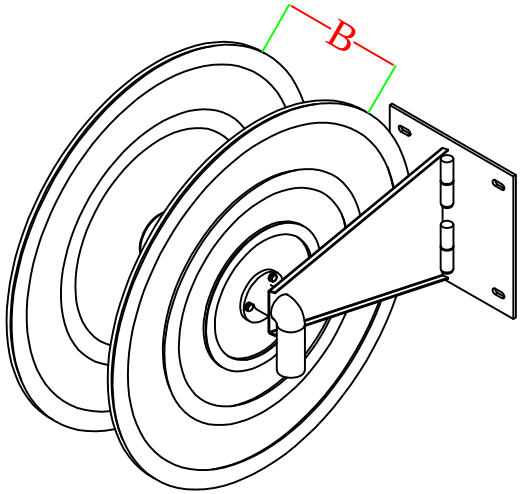

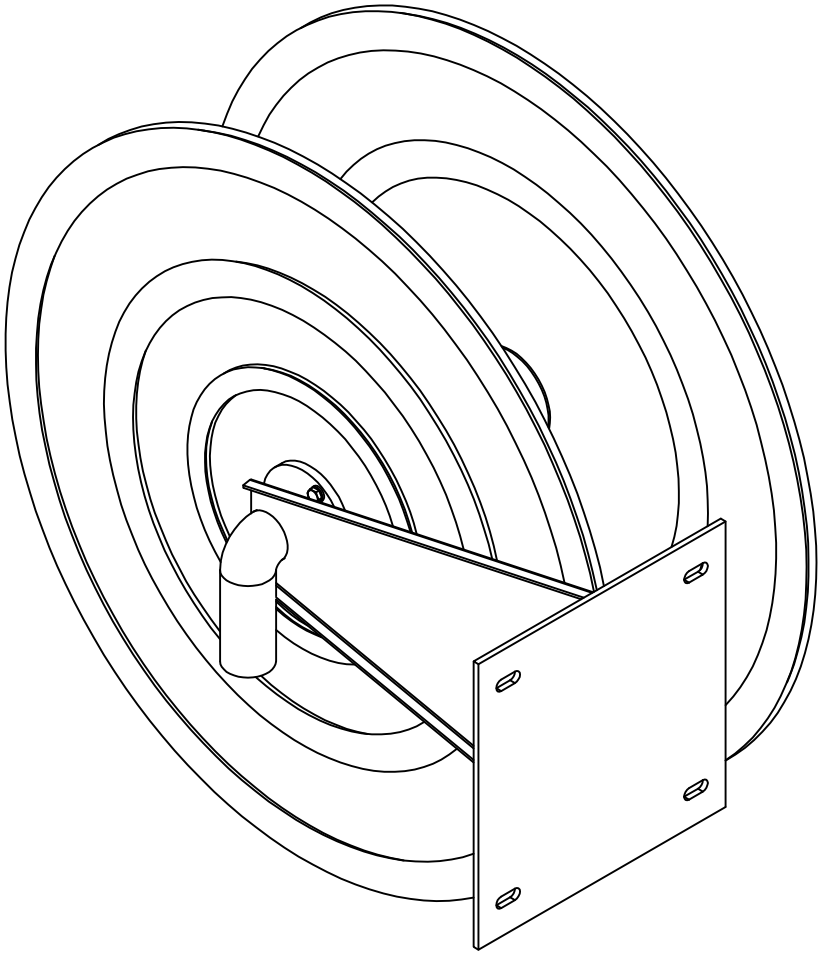

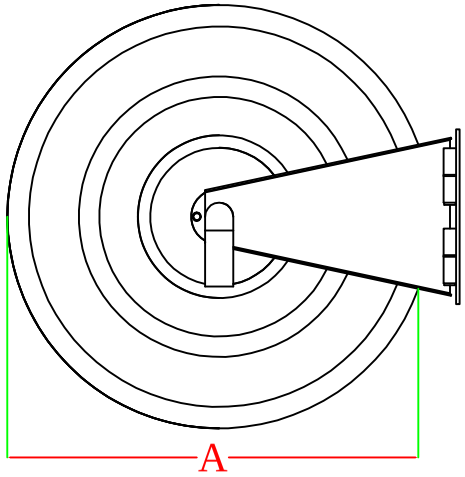

DESIGN	H.ZIABAKHSH	CUSTOMER	DRAWING No.		ARASHK SANAAT CO.	DRAWING TITLE	REV.	DESCRIPTION	BY	DATA
DRAWN	H.ZIABAKHSH					Hose Reel Detail				
CHECK	H.ABBASI	PROJECT Name:	DATA	PAGE 1						
APPROVED	F.ELLI									